Perno di ringhiera a spider quadrato in acciaio inox per ringhiere per ponti in vetro

1. Specifiche della balaustra della rotaia quadrata dell'acciaio inossidabile :

Prodotto Nome	Balaustra in acciaio inossidabile quadrato Spider Post
Modello numero:	LCH-121
Materiale	Acciaio inossidabile 304/316
finire	Spazzolato o lucidato a specchio
Formato quadrato	Spessore della parete 50 x 50 x 1,5 mm Spessore della parete 40 x 40 x 1,5 mm
Altezza	personalizzabile
Per lo spessore del vetro	10-15mm
Applicazione	Disegno ringhiera del balcone Design ringhiera portico Design ringhiera della piattaforma Design ringhiera per scale

Terminale con raccordo a ragno a 1 via
Ringhiera centrale con attacco a 2 vie a ragno
Altezza standard: 1100 mm (disponibili postazioni clienti)
Progettato per vetro 10-15mm o secondo il vostro requisito
Gli angoli regolabili si distinguono per la progettazione di scale o balconi, ecc.

2. Disegno di dimensione di Post Spider quadrato in acciaio inox per il vostro riferimento:

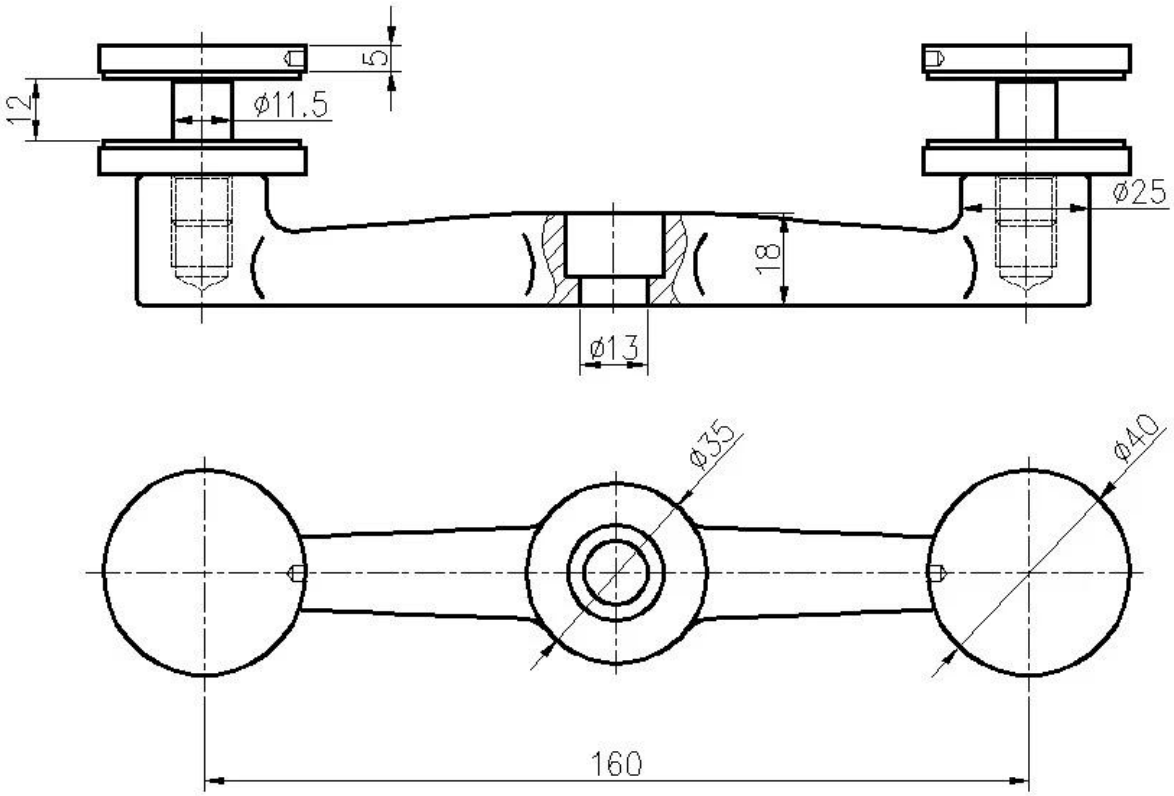
5
12
ø11.5
ø25
18
ø13
ø35
ø40
160

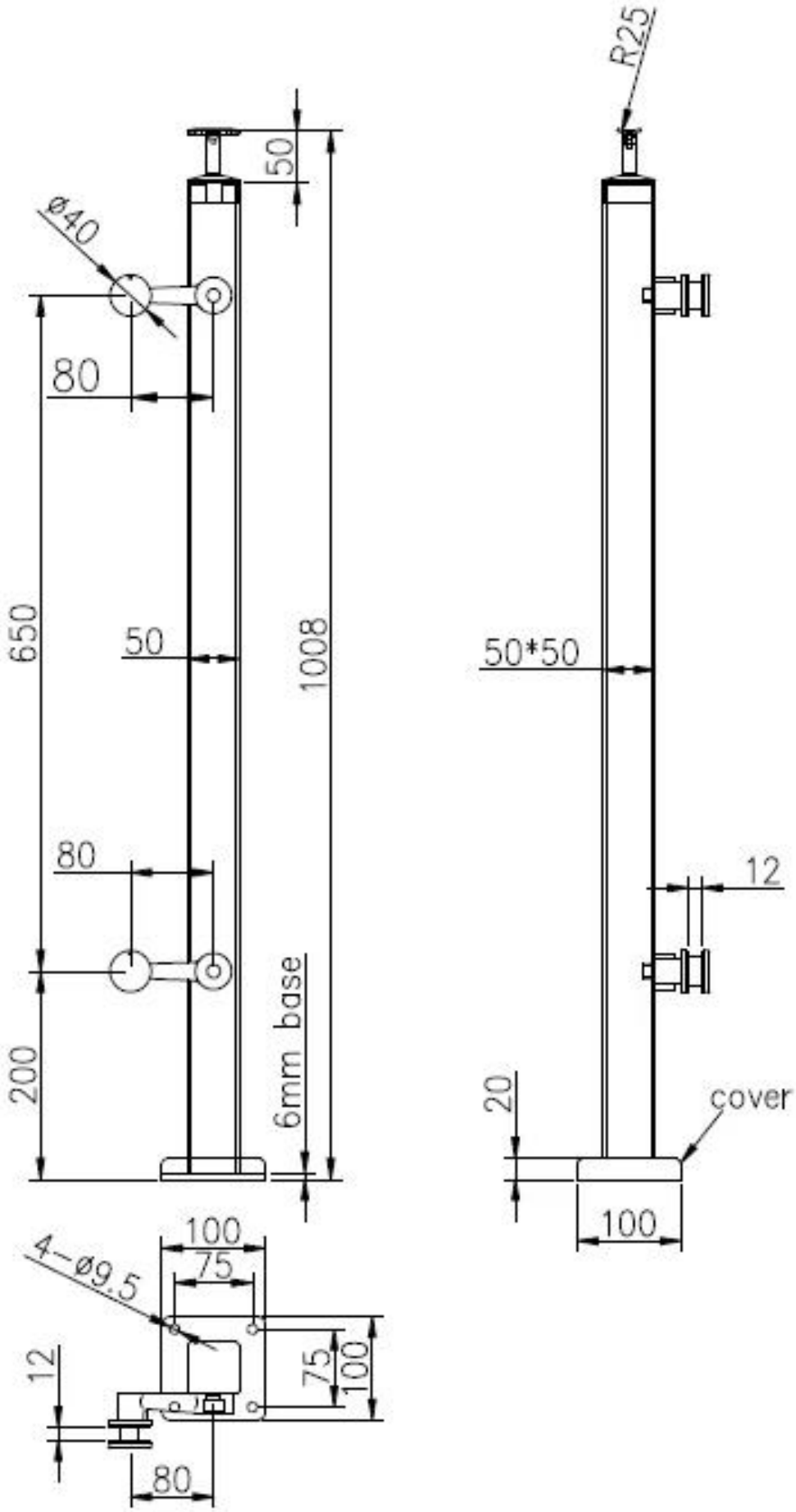
R25
50
ø40
80
650
50
1008
50*50
80
12
200
6mm base
20
cover
100
100
75
4-ø9.5
12
75
100
80

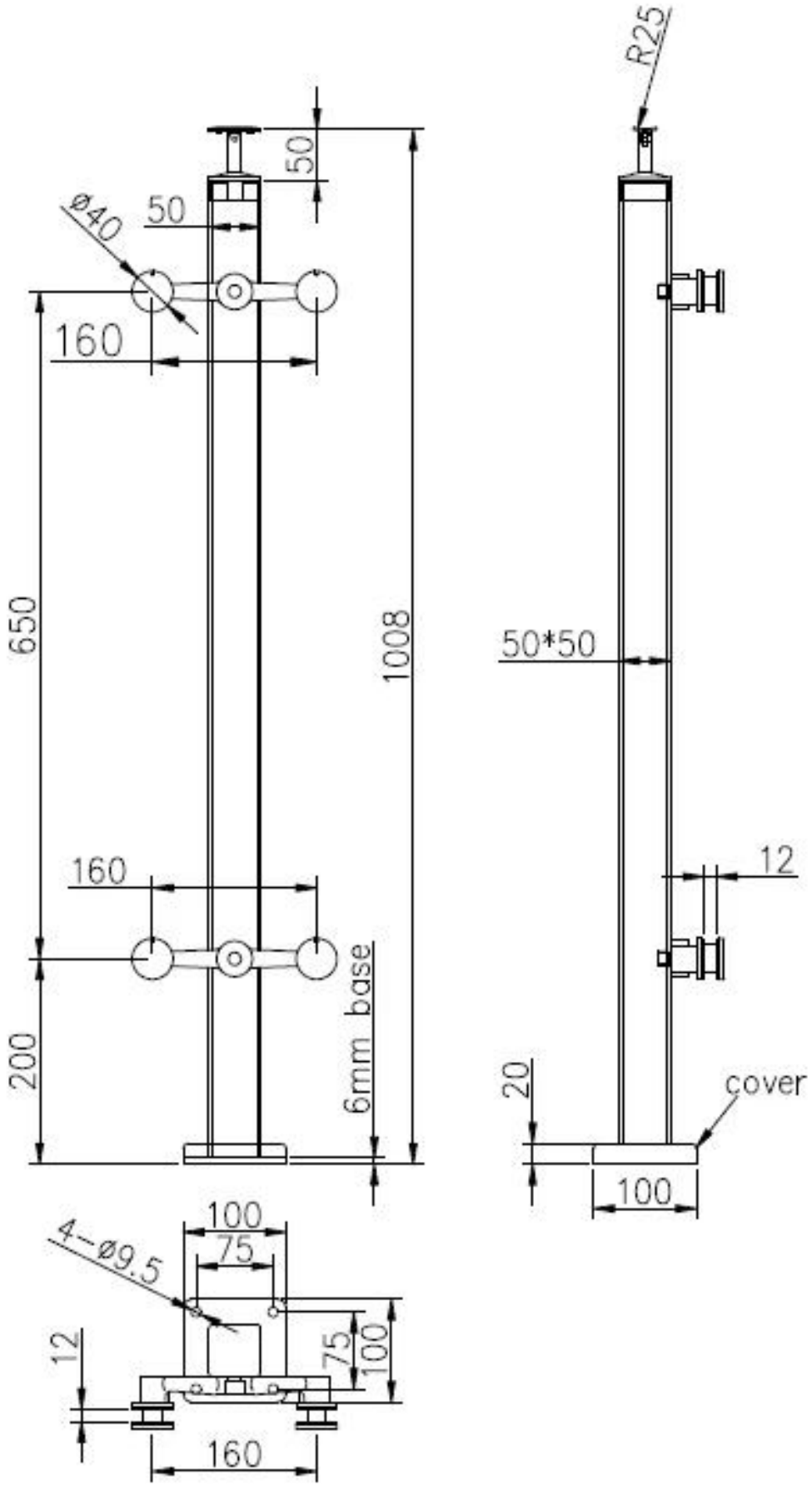

3. Foto del palo della balaustra in acciaio inossidabile:

Staffa superiore per corrimano regolabile per corrimano a tubo quadrato o tondo:

Post intermedio a 2 vie:

1 via fine post:

4. Foto di imballaggio: 1pc / sacchetto di plastica, 2 - 4 pezzi / ctn.

Azienda Informazione:

Shenzhen Launch Co., Ltd was established in 2004, located at Nanshan District, Shenzhen, and one hour by car from Hongkong International Airport. Our main product is high-grade building materials includes stainless steel balustrade post, staircase handrail, balcony guardrail, swimming pool fence and other high-grade building materials. All the products are designed strictly according to the high-end market requirements. We have our own factory in Tangxia Town, Dongguan, has a variety of precision equipment more than 50 sets: CNC lathe, milling machine, punching machine, pipe cutter, argon welder, drilling machine, polisher, etc. which can provide customers with complete product processing services. With the German SPECTRO Spectrometer, we insist on testing every batch of materials to ensure that the material is highly qualified. We also have hardness gauge, secondary element and other test equipment to ensure the products meets customers' requirements.

ABOUT US

OUR ADVANTAGE

Please do not hesitate to contact us if you have any requirement regarding our production lines, you can expect a timely reply with professional solutions!

Own factory, shortest lead time.

Can help customers design product drawings based on customer ideas and design engineering installation drawing according to the customer site sketch.

Sample order, trial order acceptable.

Provide material test report to ensure that the material is qualified.

13 years of industry experience, we can help customers recommend the best solution to help customers save cost.

OUR FACTORY

More than 13 years experience in hardware industry design and processing, we can provide customized services from design to the sample and small batch trial production.

OUR CERTIFICATE

With premium quality, competitive price and superior service, we won a lot of customers' favor.
Our products are popular in North America, European and Australia.

PRODUCTION PROCESS

Casting

CNC lathe

CNC Milling

Stamping

Drilling & Tapping

Polishing

PACKAGING & DELIVERY

Vi preghiamo di contattarci liberamente per ulteriori informazioni:
Email: sales03@launch-china.cn
Contatto: Eve Chow
WhatsApp / HP: +8615907334556