Duplex 2205 high quality stainless steel glas spigot for glass fence

Quick details:

Item name: Glass spigot

Material: Duplex 2205

Model No: SBM

Use for 10-13.52mm glass

Finish: satin or mirror

Glass spigot picture:

Glass spigot with glass:

Drawing:

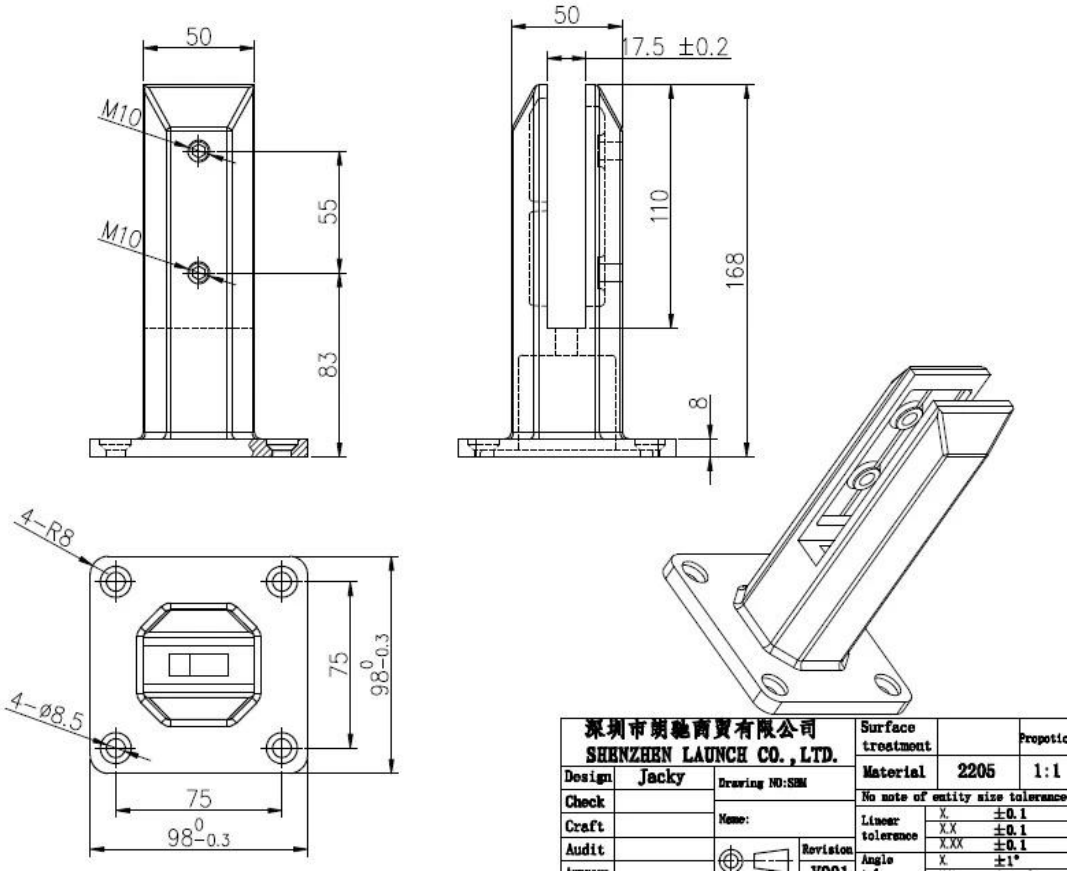

Application:

For more details please feel free to connect me: sales05@launch-china.cn. Thank you!