Nieuw ontwerp Eenvoudig te installeren Roestvrij stalen omheiningsmof voor glasrail SBM-3

Glazen spon, glazen zwembadaansluitingen, glazen sponning, spigotglas

Belangrijkste kenmerk: eenvoudiger voor installatie & nivellering aanpassing

1. Grade: SUS316, SUS316L, DUPLEX2205
2. Glasdikte: 10 mm - 13,52 mm
3. Afwerking: satijn geborsteld of glanzend gepolijst
4. Gemonteerd: bevloering
5. Toepassing: Frameloze omheiningen & Balustrade

Producten tonen:

Gepolijst in goud kleur:

Satijngeborstelde:

Spiegel gepolijst:

Tekening:

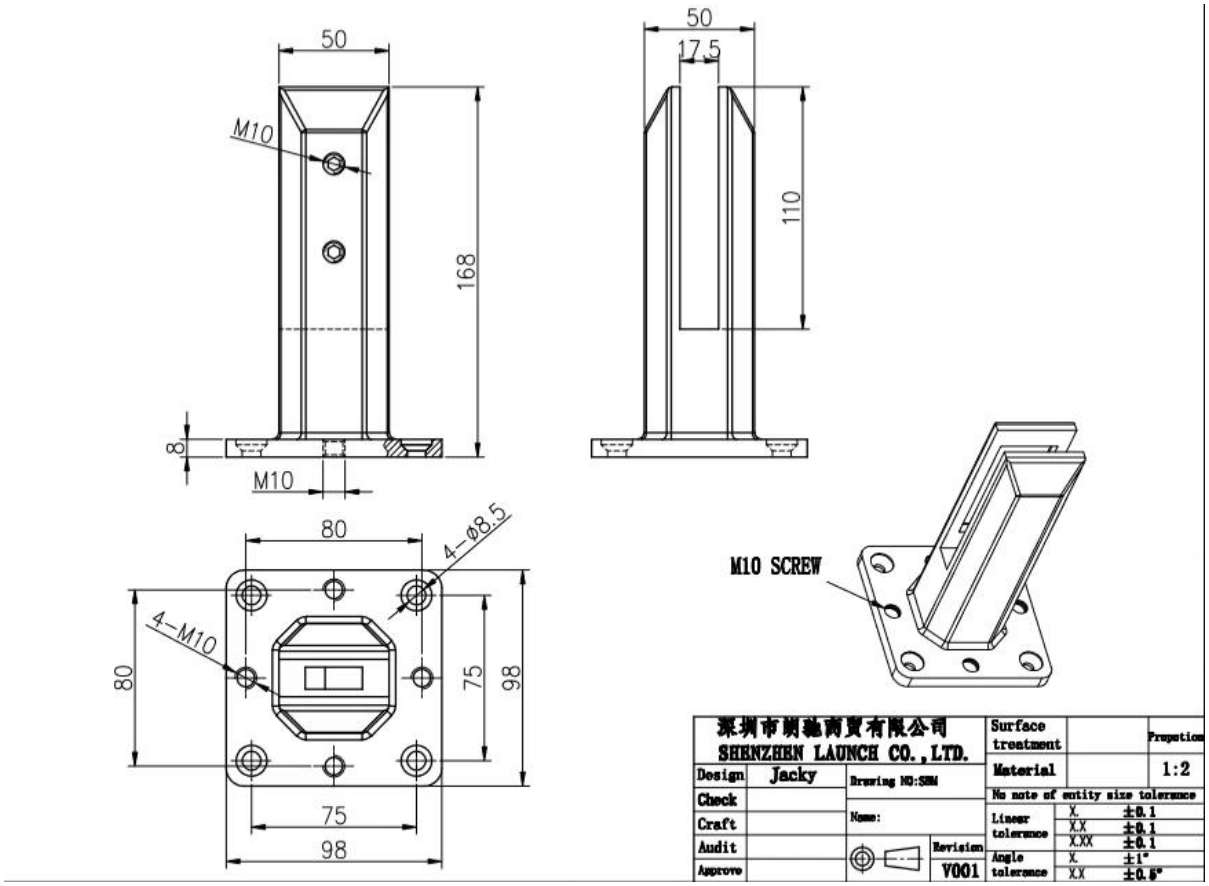

Projectfoto's:

SBM in zijdeglans:

Shenzhen Launch Co., Ltd is een professionele vervaardiging met ontwerp, productie en verkoop van roestvrij staalhardware, glazen traliewerkmontage, leuningsaccessoires en andere producten.

WAAROM VOOR ONS KIEZEN
Concurrerende prijs: de vervaardiging van het vasteland van China
Goede kwaliteit: 14 jaar ervaring technisch
Uitstekende service: 14 jaar exportervaring over de hele wereld
Verschillende ontwerpen zijn beschikbaar op basis van verzoeken van klanten

Shenzhen Launch Co., Ltd was established in 2004, located at Nanshan District, Shenzhen, and one hour by car from Hongkong International Airport. Our main product is high-grade building materials includes stainless steel balustrade post, staircase handrail, balcony guardrail, swimming pool fence and other high-grade building materials. All the products are designed strictly according to the high-end market requirements. We have our own factory in Tangxia Town, Dongguan, has a variety of precision equipment more than 50 sets: CNC lathe, milling machine, punching machine, pipe cutter, argon welder, drilling machine, polisher, etc. which can provide customers with complete product processing services. With the German SPECTRO Spectrometer, we insist on testing every batch of materials to ensure that the material is highly qualified. We also have hardness gauge, secondary element and other test equipment to ensure the products meets customers' requirements.

ABOUT US

OUR ADVANTAGE

Please do not hesitate to contact us if you have any requirement regarding our production lines, you can expect a timely reply with professional solutions!

Own factory, shortest lead time.

Can help customers design product drawings based on customer ideas and design engineering installation drawing according to the customer site sketch.

Sample order, trial order acceptable.

Provide material test report to ensure that the material is qualified.

13 years of industry experience, we can help customers recommend the best solution to help customers save cost.

OUR FACTORY

More than 13 years experience in hardware industry design and processing, we can provide customized services from design to the sample and small batch trial production.

OUR CERTIFICATE

With premium quality, competitive price and superior service, we won a lot of customers' favor.
Our products are popular in North America, European and Australia.

PRODUCTION PROCESS

Casting

CNC lathe

CNC Milling

Stamping

Drilling & Tapping

Polishing

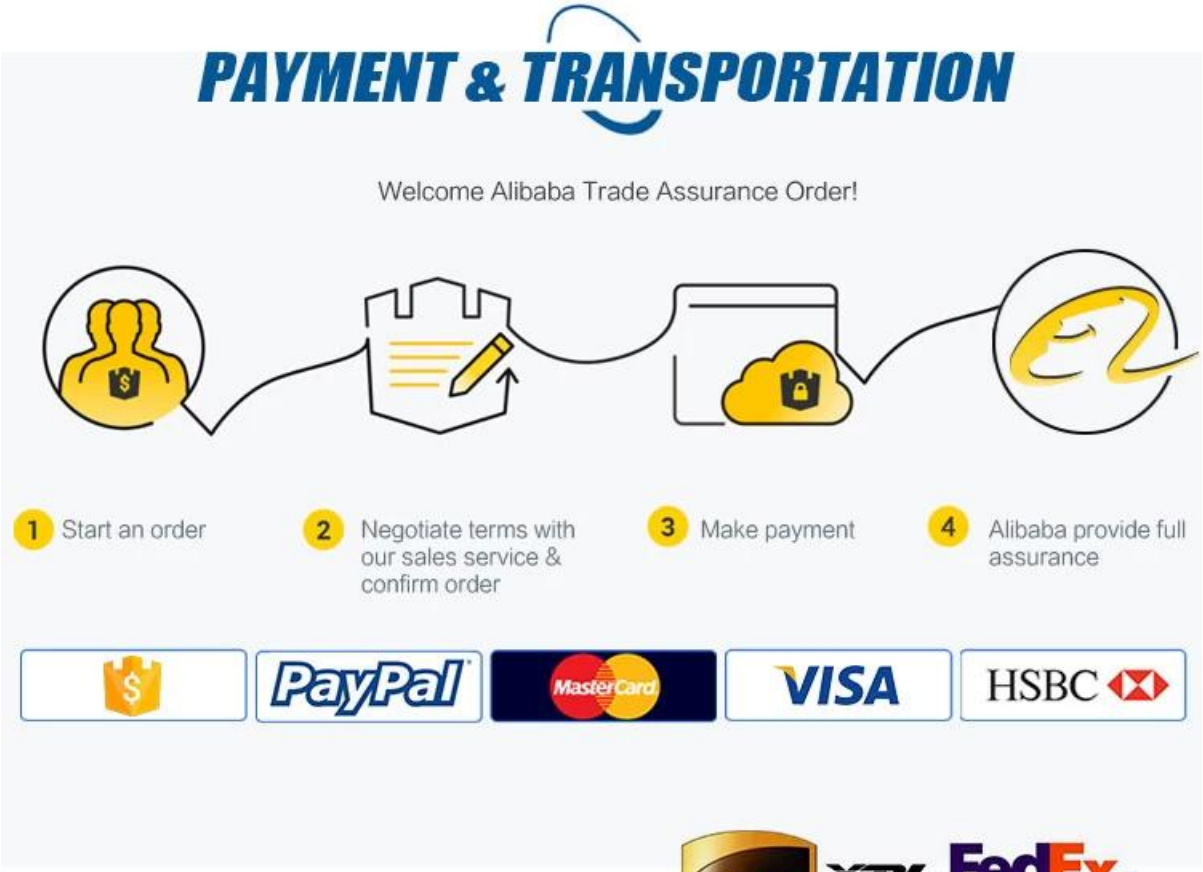

Inpakken & Levering
Verpakkingsdetails :
1. Elke tap wordt omwikkeld met plastic folie en airbag en vervolgens in een doos gedaan.
2. 100 tappen zijn verpakt in een doos van multiplex.
3. Kan ook als vereisten van cliënten worden ingepakt.
Leveringsgegevens: 10-15 werkdagen na betaling.

Neem nu contact met ons op voor meer informatie!

E-mail: sales03@launch-china.cn
Mobiel: +8615907334556