Shenzhen Launch werd opgericht sinds 2004 en we zijn al 16 jaar lang SGS-goudleverancier. Wij zijn een betrouwbare fabrikant en leverancier.

COMPANY INTRODUCTION

Verification Type: Supplier Assessment Onsite Check

Country / Region: Guangdong, China ✓

Year Established: 2004 ✓

Main Products: CNC Machining Parts,Stamping Pa... ✓

Main Markets: North America, Oceania, Mid East,... ✓

Total Annual Revenue: confidential ✓

Total Employees: 11 - 50 People ✓

Alibaba.com Gold Plus Supplier

Main Product Lines Verification Report

Presented to

Shenzhen Launch Co., Ltd.

深圳市朗驰商贸有限公司

Company Address	B5003, Building 3, Yilida Building, No. 1092 Nanshan Avenue, Dengliang Community, Nanshan Street, Nanshan District, Shenzhen City, Guangdong Province, China
Consigner of Assessment:	Alibaba
Gold Supplier Member ID:	launch168
Gold Supplier Company Name:	Shenzhen Launch Co., Ltd.
Contact Person:	Mr. Binfeng Gao
Phone Number:	0086-13802569770
Fax Number:	0086-755-86372611
Email:	gbf999@china.com
Website Address (URL):	http://launch-china.en.alibaba.com

Service Provided by SGS
Report No.: 19536352_P+T

Alibaba.com Global trade starts here. SGS

Alibaba.com Gold Plus Supplier

Verified

Assessment Report

Presented to

Cooperation Company of Shenzhen Launch Co., Ltd.

深圳市朗驰商贸有限公司合作工厂

Gold Supplier & Assessed Company Relationship:	☐ Self-owned ☐ Wholly Owned ☐ Shareholder/Partner ☐ Kindred between Owners ☒ Cooperation Partner
Company Address	Confidential
City / Country:	Huizhou / China
Consigner of Assessment:	Alibaba & Shenzhen Launch Co., Ltd.
Gold Supplier Member ID:	launch168
Gold Supplier Company Name:	Shenzhen Launch Co., Ltd.
Contact Person:	Confidential
Phone Number:	Confidential
Fax Number:	Confidential
Email:	Confidential
Website Address (URL):	http://launch-china.en.alibaba.com

Service Provided by SGS
Report No.: 19552720_P

Alibaba.com Global trade starts here. SGS

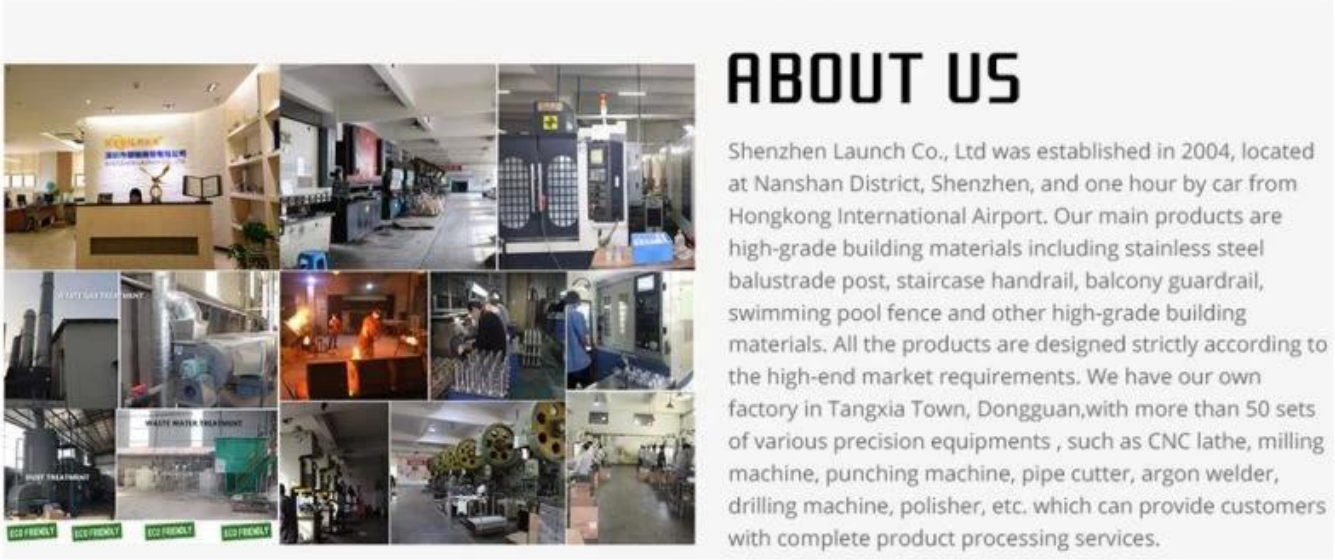

ProductTonen

Productnaam	Verstelbare kabelspanner
Modelnr.	T803
Materiaal	SS304 / SS316
Oppervlakteafwerking	Satijn / spiegel / anderen
Kabeldiameter	3 mm, 4 mm, 5 mm
Toepassing	Kabelrailsysteem voor binnen en buiten

KEBIL科比奥®

Dimensies

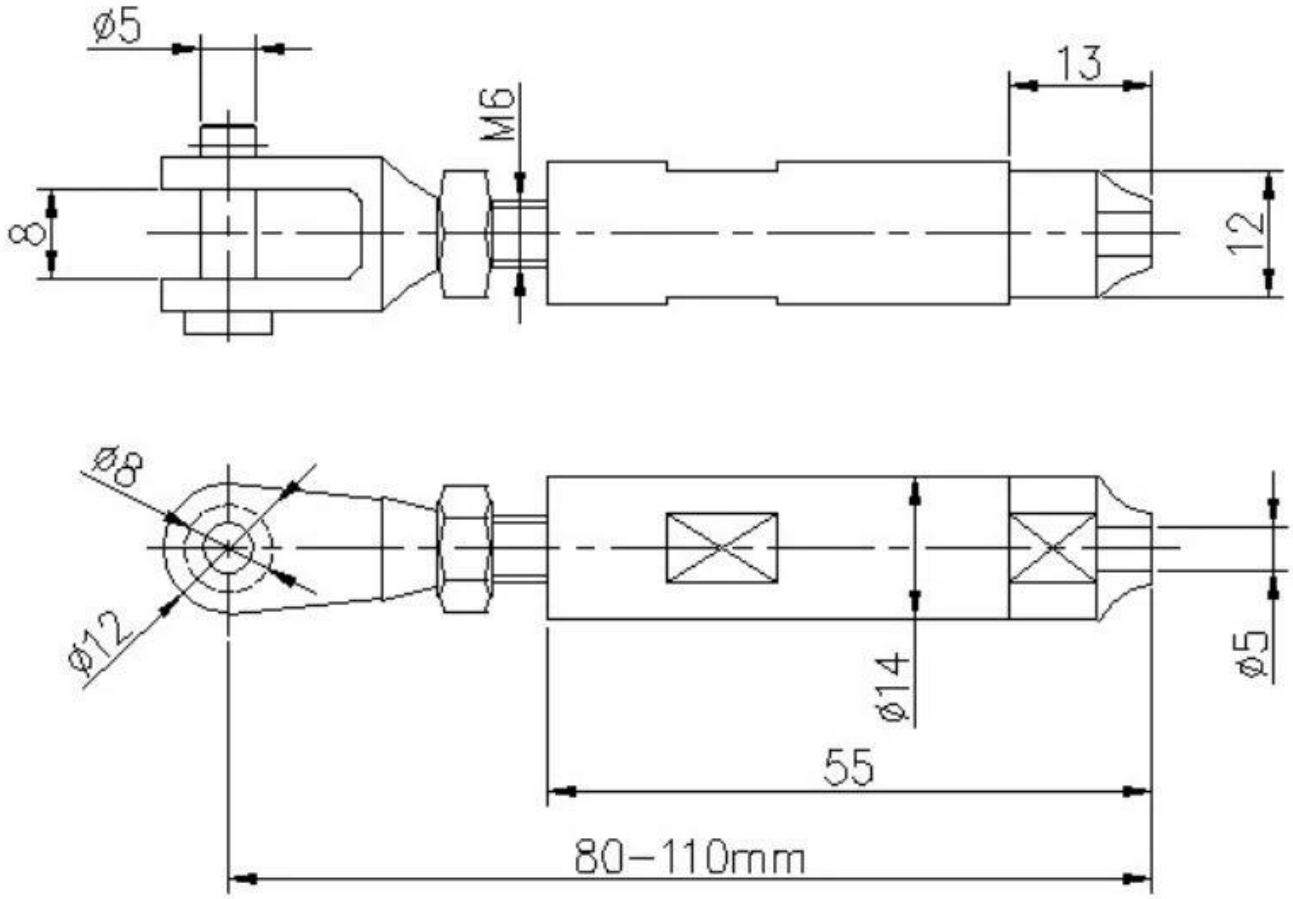

Massaproductie

Verpakkingsfoto

Anderetypesvankabelspannerszijnbeschikbaar

Hoenaarinstallerendekabelspanner?

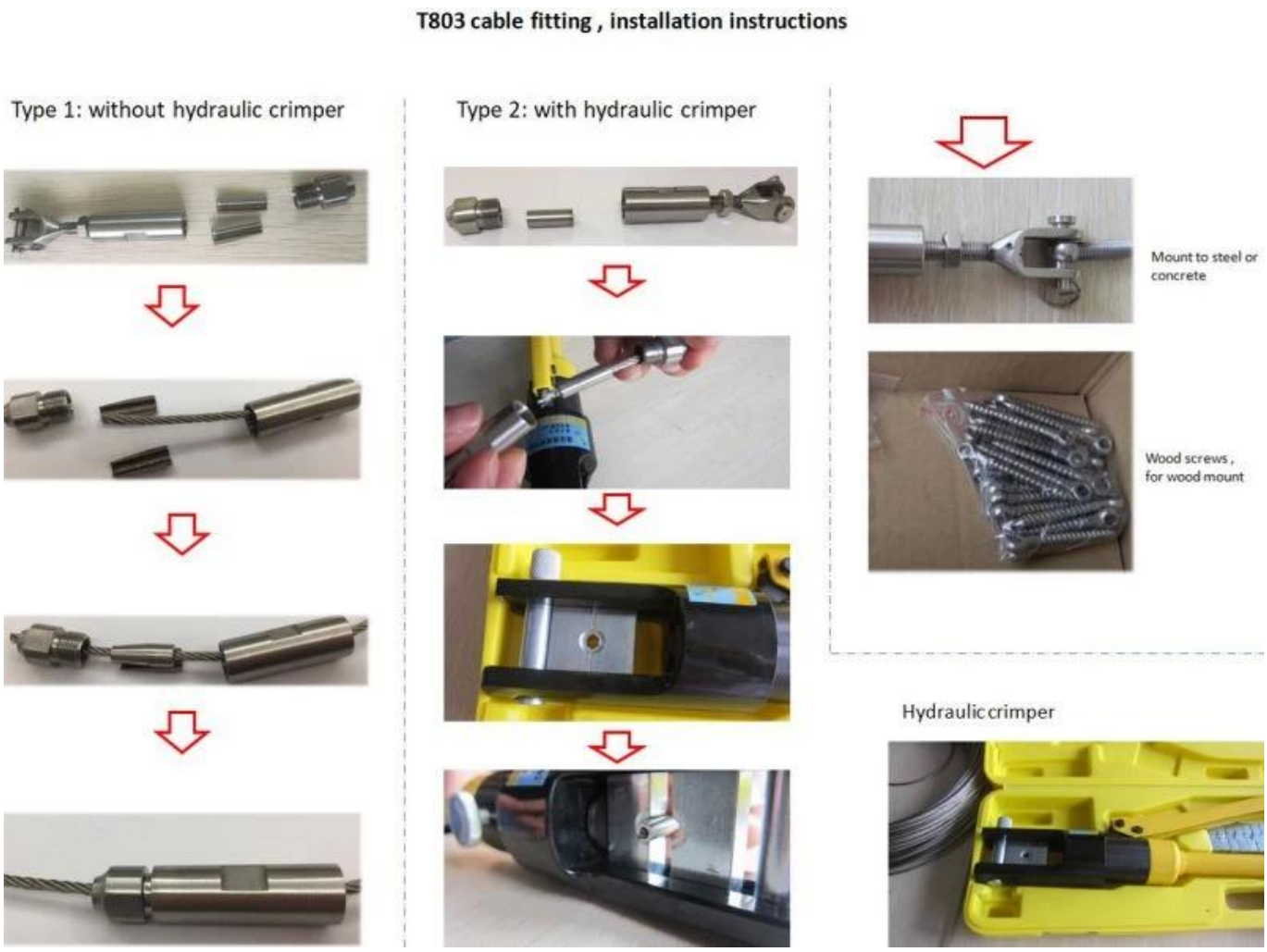

Andereonderdelennaarbouweneencompleetkabeltraliewerk

Kabel:
3 mm, 4 mm, 5 mm, 6 mm en andere formaten zijn beschikbaar

Kabelrailpaal

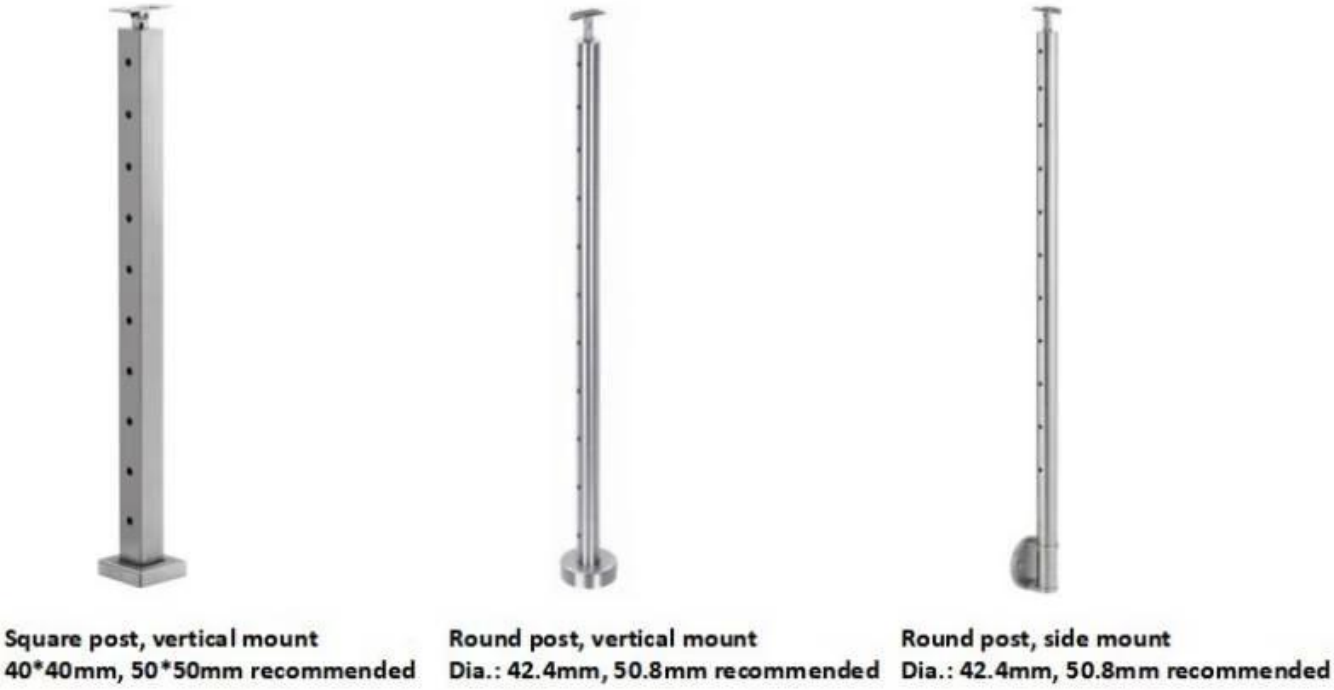

Projecttonen

KEBIL科比奥®

KEBIL科比奥®

Mocht u een vraag voor hen hebben, neem dan gerust contact met mij op
Frank Fang
E-mailadres: sales02@launch-china.cn
Telefoon / WhatsApp / Wechat: +8615906261741