Sheet metal glass to glass hinge which we provide must be suitable for your swimming pool gate.

name	**G-G1**(sheet metal glass to glass hinge)
material	stainless steel 316
finish	mirror or satin polished
for glass thickness	8-12mm
MOQ	1 set
function	to connect the glass panel to glass gate, self closing
package details	1. two hinges/inner case 2. four cases/carton 3. as per your requirement
shipping method	by UPS,DHL,FedEX,TNT,by air and by sea

G-W 1

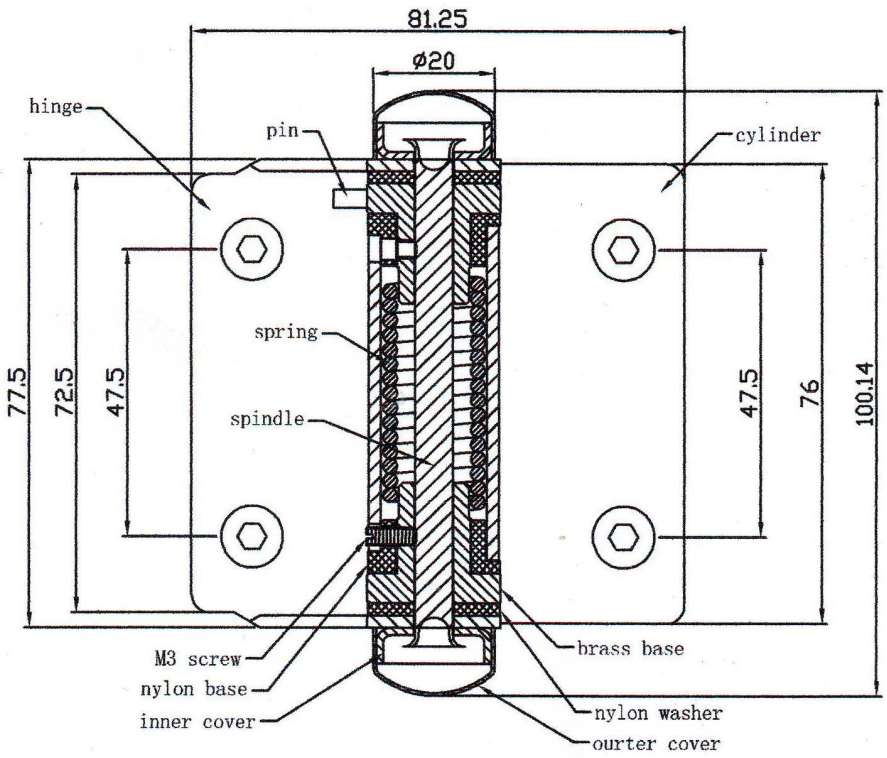
81.25
ø20
hinge
pin
cylinder
spring
spindle
77.5
72.5
47.5
47.5
76
100.14
M3 screw
nylon base
inner cover
brass base
nylon washer
ourter cover

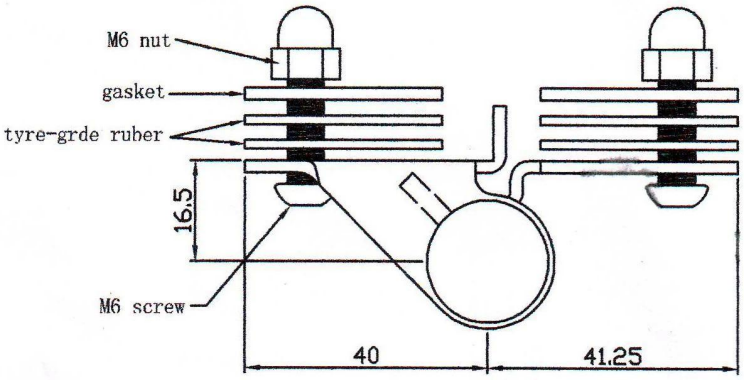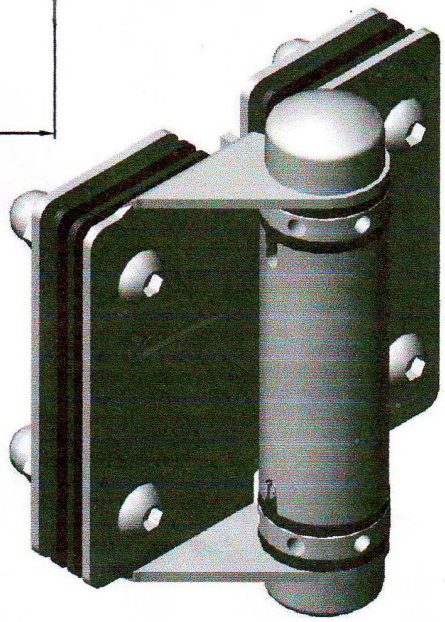
M6 nut
gasket
tyre-grde ruber
16.5
M6 screw
40
41.25