316 stainless steel cable railing hardware cable tensioner for 3-5mm cables , swageless cable tensioner , no need hydraulic crimpers .

Feautures-

Item	cable railing hardware, cable tensioner
Cable diameter	3mm 4mm 5mm
Application	steel post /wood post
Type	swageless
Material	316 stainless steel / 304SS
MOQ	50 pairs

Photos of T803 cable tensioner -

T803 cable tensioner with bolt /wood screw

T803

T803 cable tensioner drawing specs.

Model: T803

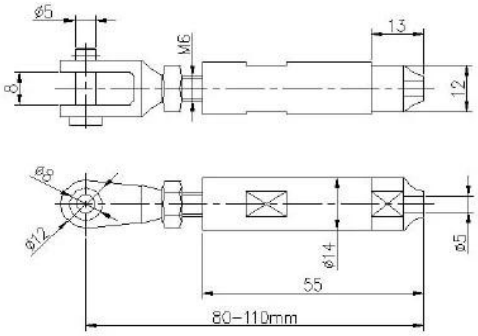

SWAGELESS TYPE CABLE TENSIONER

We also have aother types of cable tensioner for your selection -
T804 cable tensioner , for 4-5mm cables

T807A cable tenioner , mainly for small cables 3mm diameter

Project photos of cable railings with cable tensioners -

Project Photos

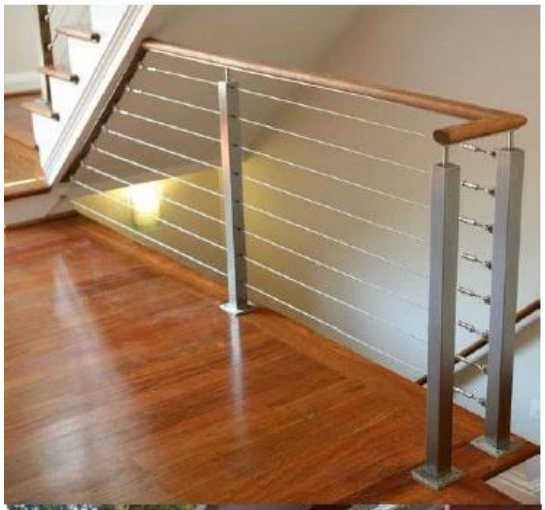

Company profile-

Shenzhen Launch Co., Ltd was established in 2004, located at Nanshan District, Shenzhen, and one hour by car from Hongkong International Airport. Our main product is high-grade building materials includes stainless steel balustrade post, staircase handrail, balcony guardrail, swimming pool fence and other high-grade building materials. All the products are designed strictly according to the high-end market requirements. We have our own factory in Tangxia Town, Dongguan, has a variety of precision equipment more than 50 sets: CNC lathe, milling machine, punching machine, pipe cutter, argon welder, drilling machine, polisher, etc. which can provide customers with complete product processing services. With the German SPECTRO Spectrometer, we insist on testing every batch of materials to ensure that the material is highly qualified. We also have hardness gauge, secondary element and other test equipment to ensure the products meets customers' requirements.

ABOUT US

OUR ADVANTAGE

Please do not hesitate to contact us if you have any requirement regarding our production lines, you can expect a timely reply with professional solutions!

Own factory, shortest lead time.

Can help customers design product drawings based on customer ideas and design engineering installation drawing according to the customer site sketch.

Sample order, trial order acceptable.

Provide material test report to ensure that the material is qualified.

13 years of industry experience, we can help customers recommend the best solution to help customers save cost.

OUR FACTORY

More than 13 years experience in hardware industry design and processing, we can provide customized services from design to the sample and small batch trial production.

OUR CERTIFICATE

With premium quality, competitive price and superior service, we won a lot of customers' favor.
Our products are popular in North America, European and Australia.

PRODUCTION PROCESS

Casting

CNC lathe

CNC Milling

Stamping

Drilling & Tapping

Polishing

PACKAGING & DELIVERY