Glass-to-wall distance adjustable 38mm DIA adjustable glass standoff for 10-12mm glass for frameless glass railing designs .

Features of adjustable glass standoff-

1. Wall to glass panel distance adjustable !
2. Material can be SS304 & 316
3. Finish - satin , mirror , black , machined finish
4. 38mm diameter / 50mm diameter
5. concrete bolt or wood screw

Photos of adjustable glass standoff with machined finish & black finish -

SHENZHEN LAUNCH CO., LTD

Drawings for different sizes of adjustable glass standoff-

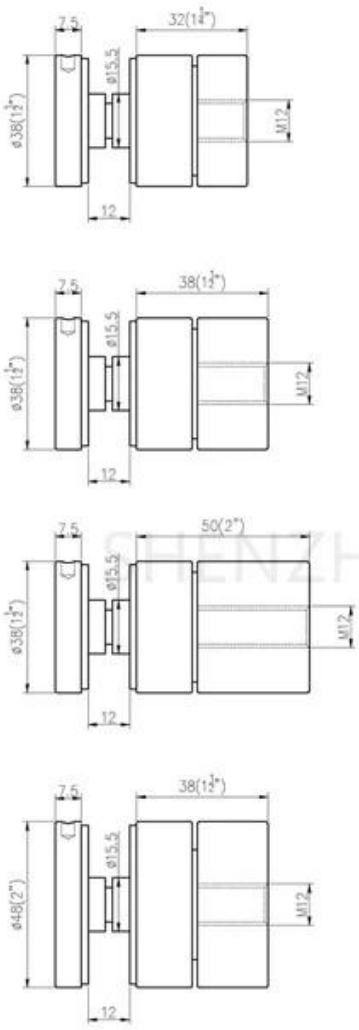

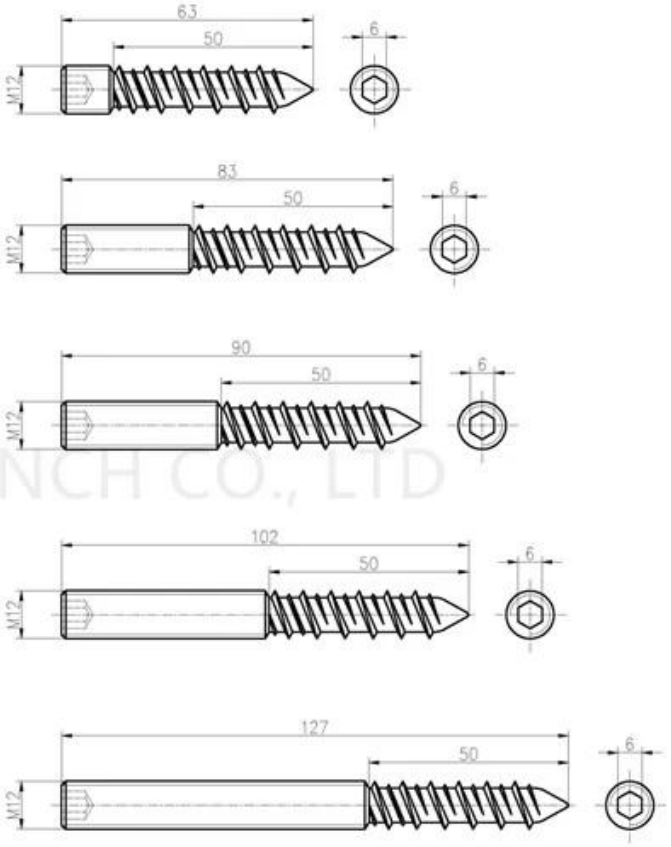

SHENZHEN LAUNCH CO., LTD

Packing details for adjustable glass standoff-
1 pc into a small box ; 50 pcs into a carton

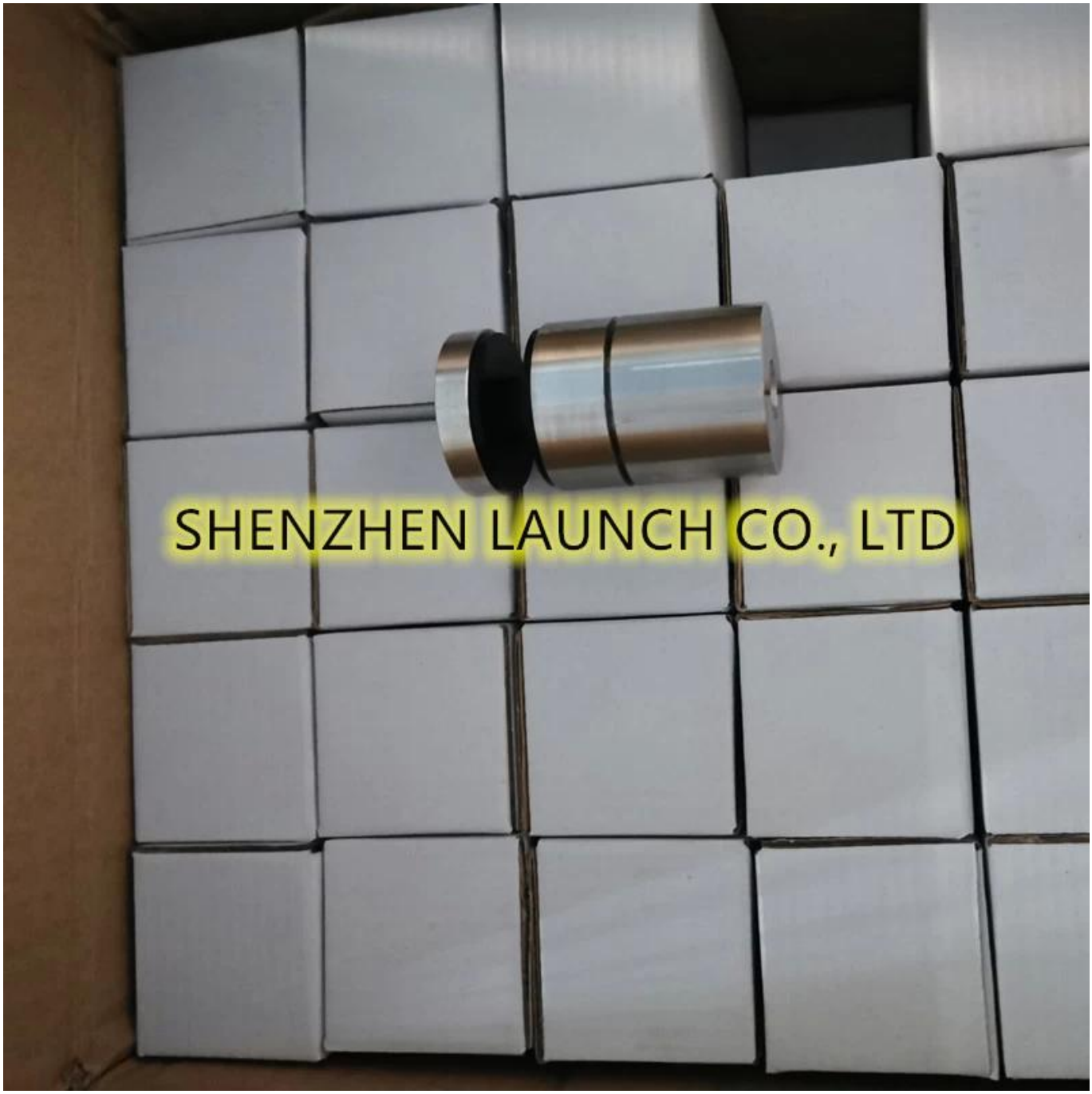
SHENZHEN LAUNCH CO., LTD

Frameless glass balustrade Railings with adjustable glass standoffs -