Shenzhen Launch manufactures high quality 304/316 stainless steel 50mm wall mount glass standoff bracket for frameless balcony glass railings .

Features of glass standoff bracket-

1. Model No. SF-50
2. Material stainless steel 304 or 316
3. Diameter 50mm
4. wall mount with M12*120 bolt
5. 50*12mm cap , 50*30mm body
6. MOQ 20 PCS

Photos of glass standoff bracket -

KEBIL科比奥®

Drawing of glass standoff bracket-

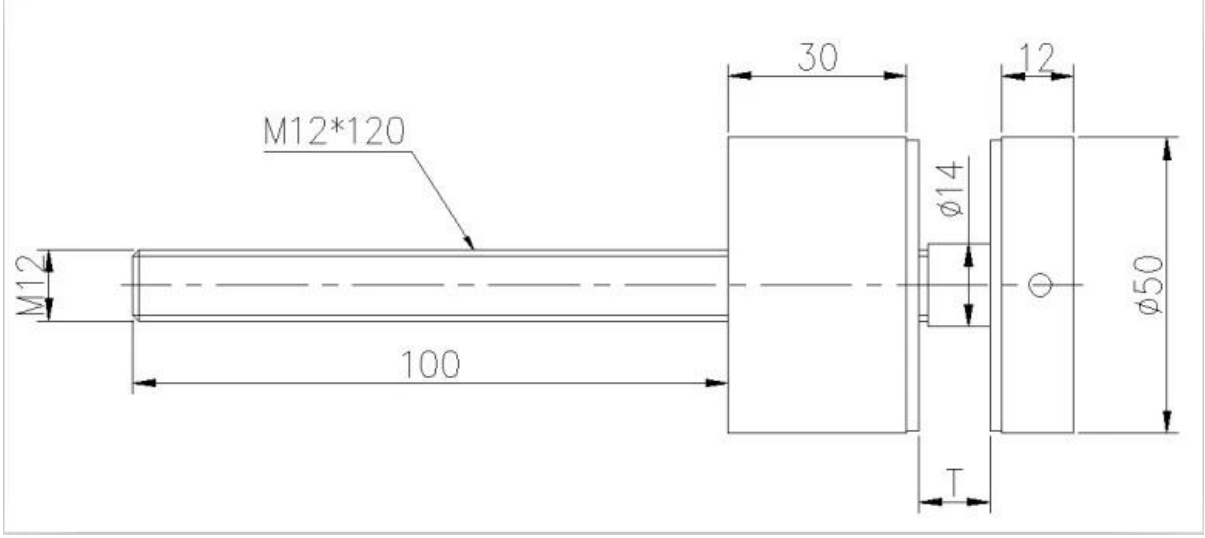

Glass standoff bracket for glass balcony railings-