SHENZHEN LAUNCH manufactures custom designs & sizes of Brass wire rope ferrules & end stop by CNC machining .

Below brass wire rope ferrules are to be used as end stop /keeper for 8mm diameter wire ropes .

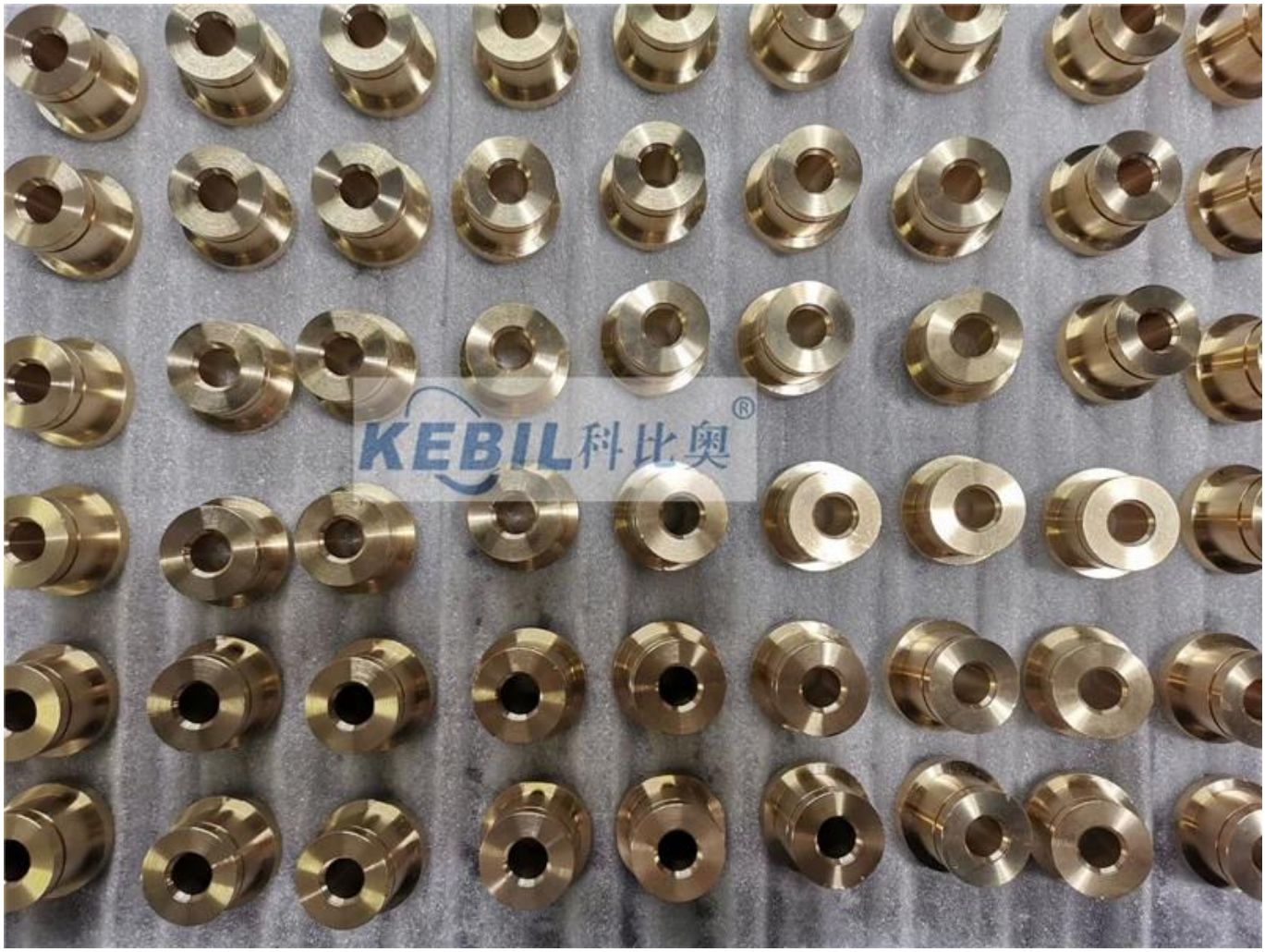
KEBIL科比奥®

Brass wire rope ferrule drawing-

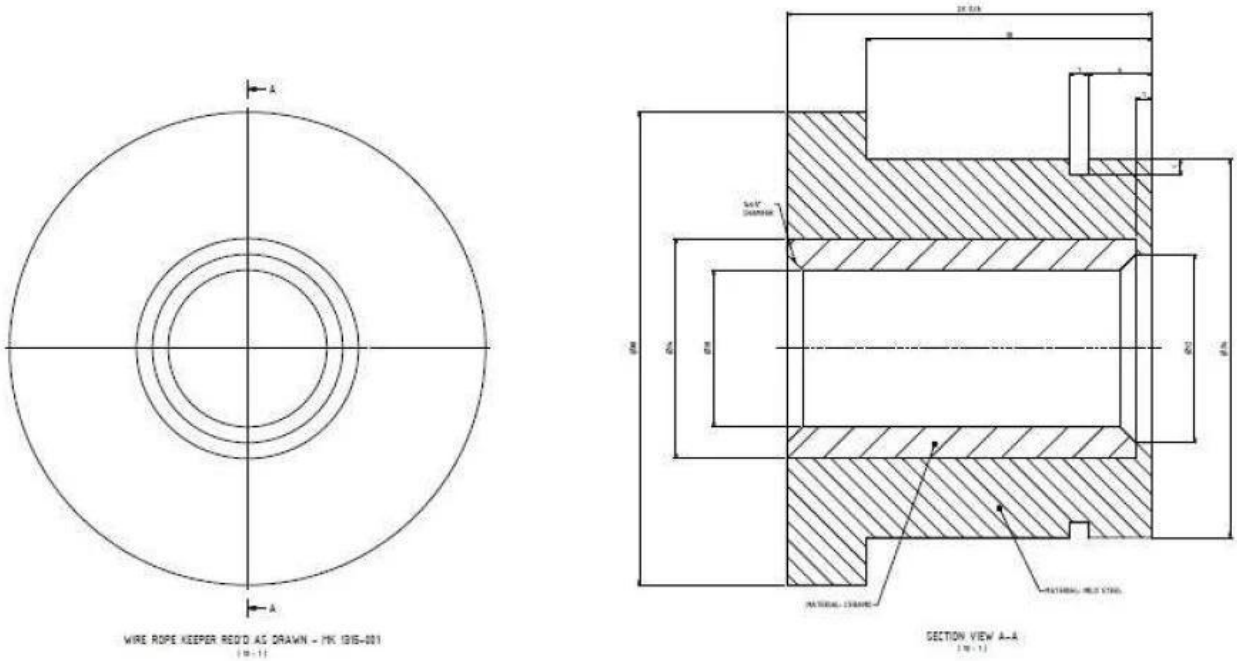

We can offer a variety of custom cnc machining parts with below specifications-

Material	• stainless steel 201/304/316 etc. • Steel - mild steel , carbon steel , Q235, Q195, Q345 ,45# etc. • Brass HPb63, HPb62, HPb61, HPb59, H59, H68, H80, H90 etc. • • Copper C11000,C12000,C12000, C36000 etc. • Aluminum AL6061, Al6063, AL6082, AL7075, AL5052, A380 etc. •
Finish	• Stainless Steel Polishing, Passivating, Sandblasting, Laser engraving • Steel Zinc plating, Oxide black, Nickel plating, Chrome platingk, Carburized, Powder Coated • Aluminum parts • Clear Anodized, Color Anodized, Sandblast Anodized, Chemical Film,Brushing,Polishing
Customers'drawing format required	igs; stp; autocad ; pdf
Applications	Industrial equipments ,communication equipments , electronical parts , auto parts ,medical equipments , new energy supplies .
Quality Inspection	each pc will checked before delivery , and we will provide QC report on dimensions

CNC machining workshop video -