Chinese Supplier Glass Railing Spigot, China Wholesale Glass Pool Fence Spigot

Product Description

Product Mame	Chinese supplier glass railing spigot, China wholesale glass pool fence spigot
Material	Stainless steel 316 / duplex 2205
Finish	Mirror polished / satin brushed
For Glass Thickness	8-13mm
Height	168mm
Round Base Size	Diameter 100mm
Net Weight	1.32kg/piece
Manufacture Method	Casting (high quality)
Packaging Details	1) One piece into one bubble bag, then into one white box 2) 12 pieces into 365x330x230mm cardboard carton 3) Packing as customers' requirements
Application	Swimming pool fence, balcony glass railing, deck frameless glass railing, staircases handrail design
Certification	Yes. Meet Australia and New Zealand standards
Sample	Available
MOQ	No limited. You can order as per your job requirement.
OEM & ODM Service	Available
Port	Shenzhen port, Guangdong, China

Round Glass Spigot Destails

1) Glass spigot technical drawing

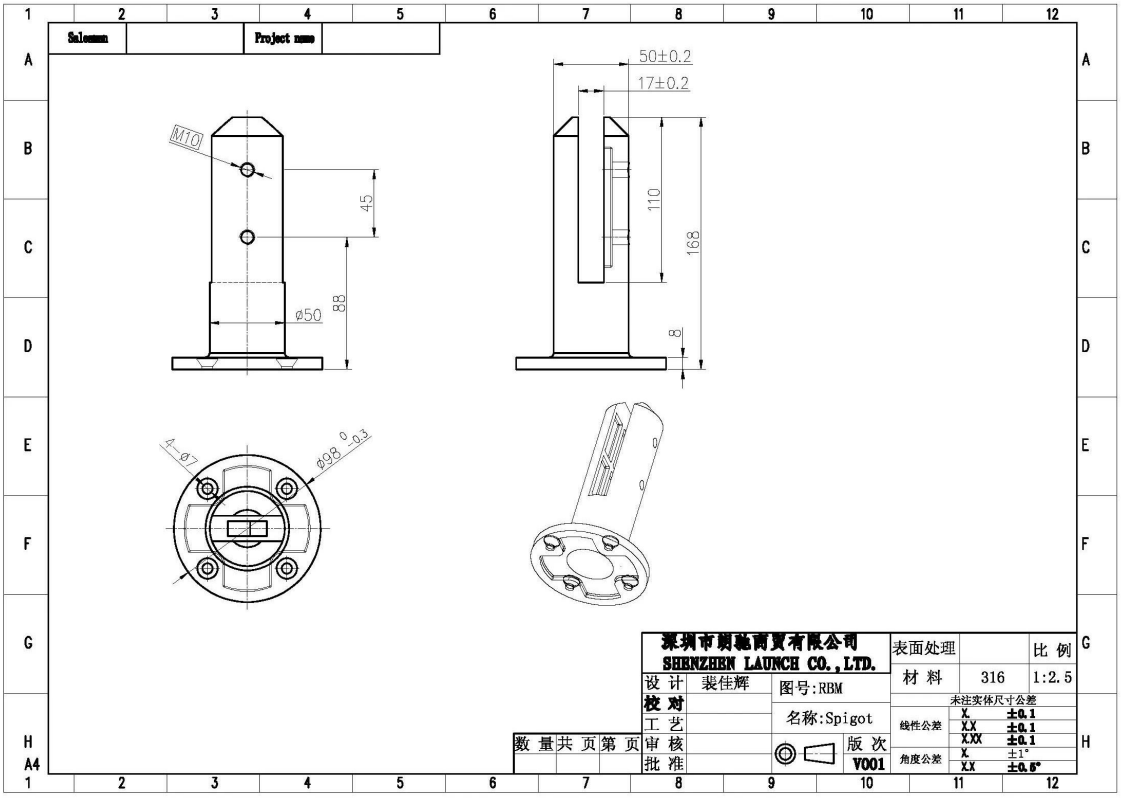

2) Round spigot pictures

316
RBM

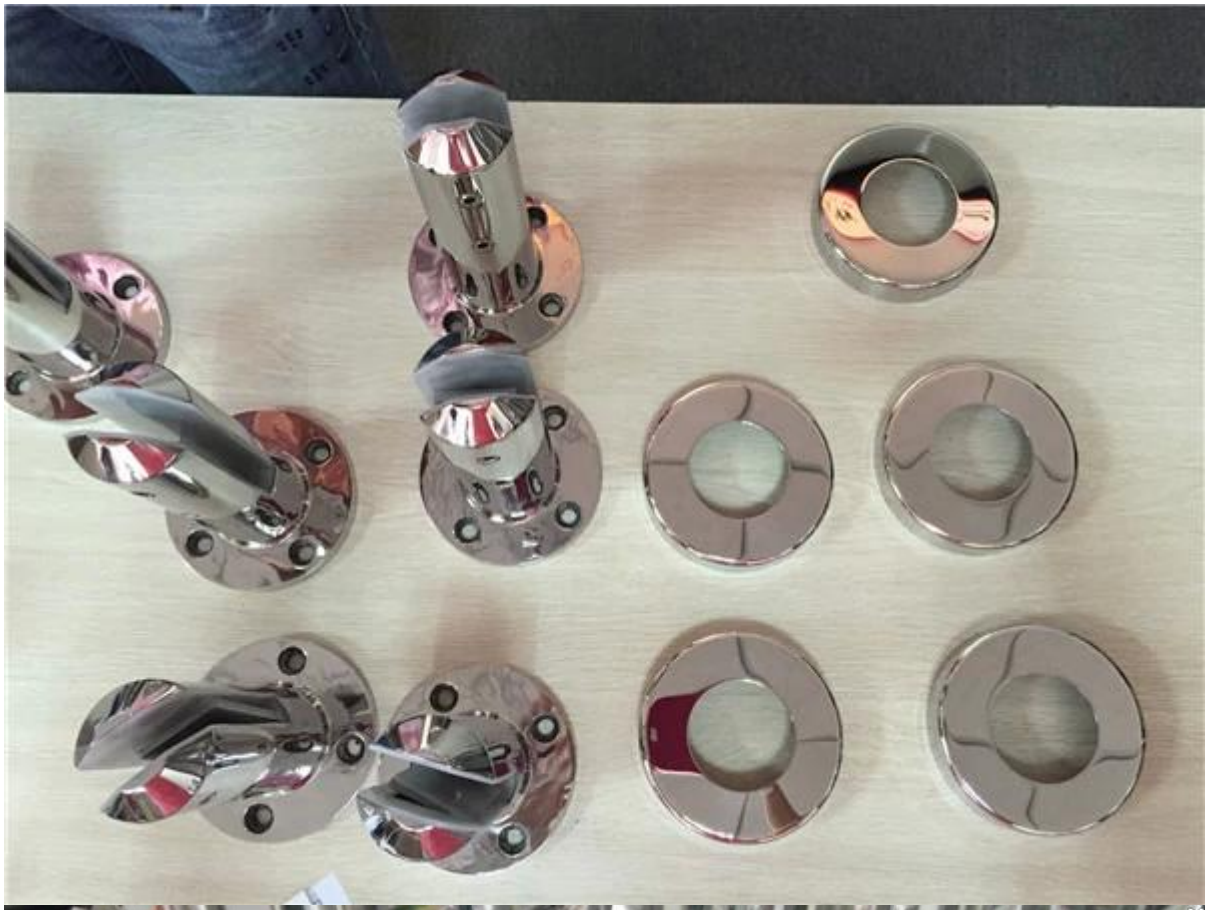

3) Spigot installation guide

fixing method: base plate spigots

Mark out the centre line of proposed glass fence with a chalk line. Determine clamp location based on a sheet size (recommendation on pages 1 & 2). Use base plate as a template to mark out the hole positions and drill holes to suit.

Note: Do not exceed 100mm gaps between glass panels. Optimum gap is 40mm to 60mm

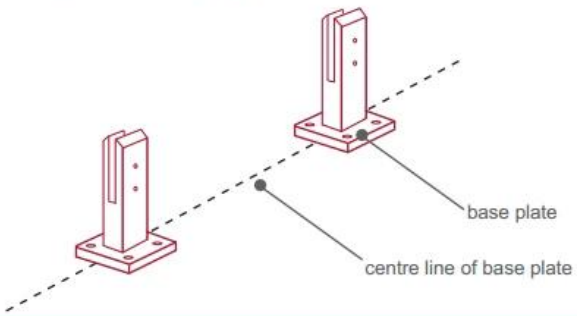

Now the base plated spigots can be fitted to the floor and plumbed via shims (not supplied) under the base plates. Be sure to tighten firmly as the smallest of movement at the base plate will result in noticeable movement at the bottom of the glass fence.

Tip: By setting the two outer spigots of your total span, a string line can be run in the 'throat' of the spigots, giving correct height for all spigots in between

Note: Do not exceed 100mm gap from the fixing surface to the bottom of the glass

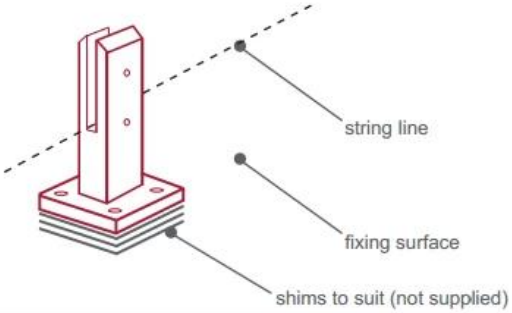

When all spigots are installed, slip domical cover the top of the spigot to hide fixings. It will be necessary to turn the adjustment screws on the spigot face all the way in to allow cover to pass over

Note: Same installation method applies to round base plate spigot

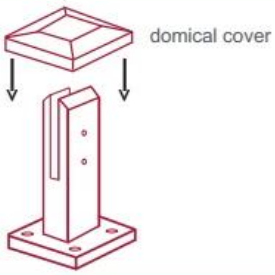

The glass is then installed to the spigots.
Place plastic packers between glass & spigot, at no stage should glass touch the metal
How adjustability works:
1. Place glass in spigot
2. Fix/ tension glass both sides with allen key

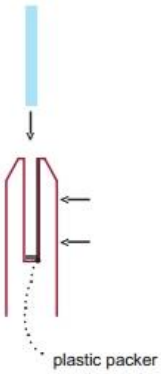

4) -For square glass spigot, go HERE.
- For glass spigot Youtube video, go HERE.
- We also provide glass spigot related products:
  magnetic glass latch, heavy duty glass hinge for pool fence, slot handrail tube for hand rail

Glass Spigot Safety Packaging

1. One piece into one bubble bag, then into one white box.
   12 pieces into 365x330x230mm cardboard carton.
2. Packing as customers' requorements.

Frameless Glass Spigot Projects

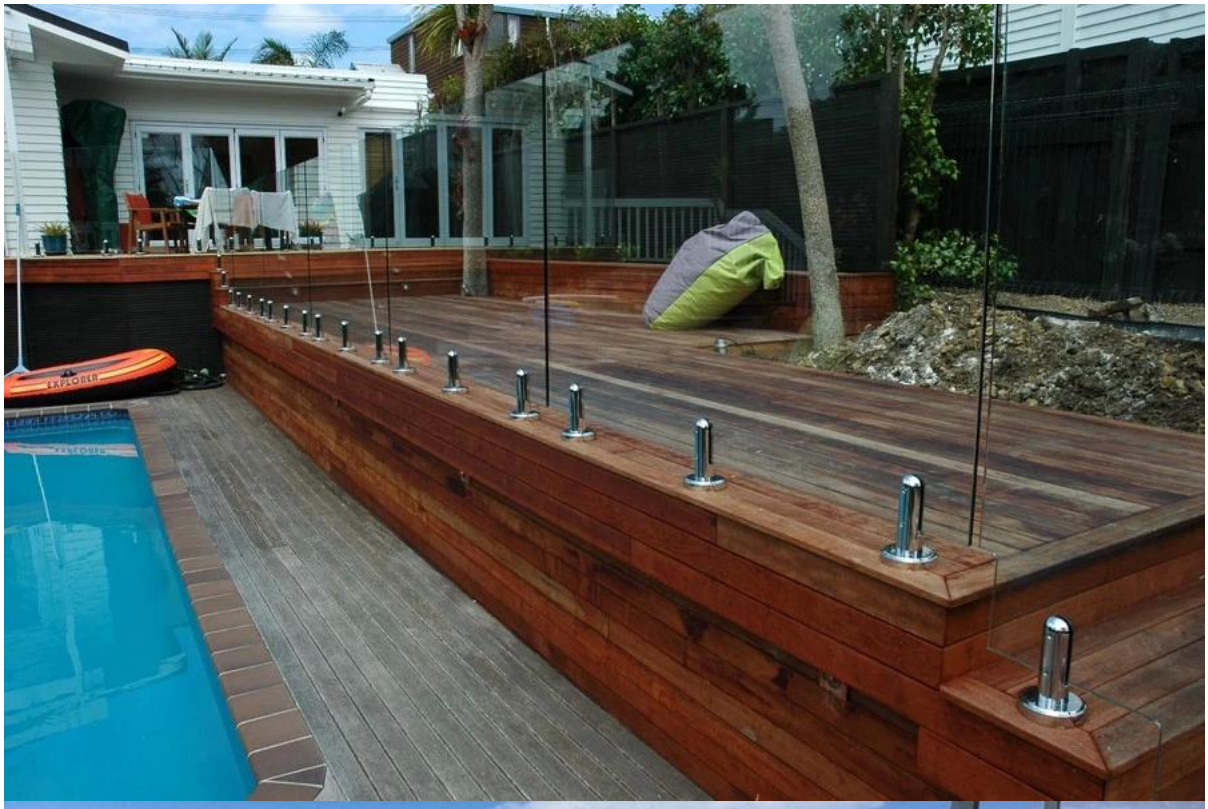
EXPLORER

FAQ

1.what material do you have ?
SS304, SS316, SS316L, duplex 2205, ect.

2.Can you send me your whole price list ?
Sorry, as the price related to many factors, such as quantity, material type, surface treatment and so on, we will offer you exact quote after we confirm your detailed requirements.

3.Do you offer OEM & ODM service ?
Yes, we can make the products according to your technical drawings or samples. We are professional in investment casting, die casting, stamping, CNC machining, etc.

4.What kind of payment you accept ?
T/T, L/C, PayPal, West Union, etc.

5.What is your payment term ?
T/T (30/70) or L/C at sight.

6.What is your delivery time ?
Within 5 workdays for hot-sale items. 15-25 workdays for bath orders.

7.Do you offer after-sale service ?
Of course, any question after you purchase our products, we will get back to you within 24 hours.

Contact

Any enquiries or questions, please leave a message. Will get back to you as soon as possible!
For any urgent enquiry, please get in touch as below
Skype: launch_04
wechat: 973219879
Mob/whats APP: +86-13530506265