DIY frameless glass pool fencing 180 degree spring loaded hinge 316 stainless steel matte black finish .

Features-

- Model No. G-G
- Material . 316 stainless steel
- Max. door leaf weight 30kg per pair of hinge
- Max. door leaf width 900mm
- Spring can be adjusted for closing speed control

Glass weight for reference -

Glass thickness	8mm	10mm	12mm	14mm
weight (kg/□□	18.2	22.7	27.3	31.8

Matte Black powder coating finish for G-G spring loaded hinge-

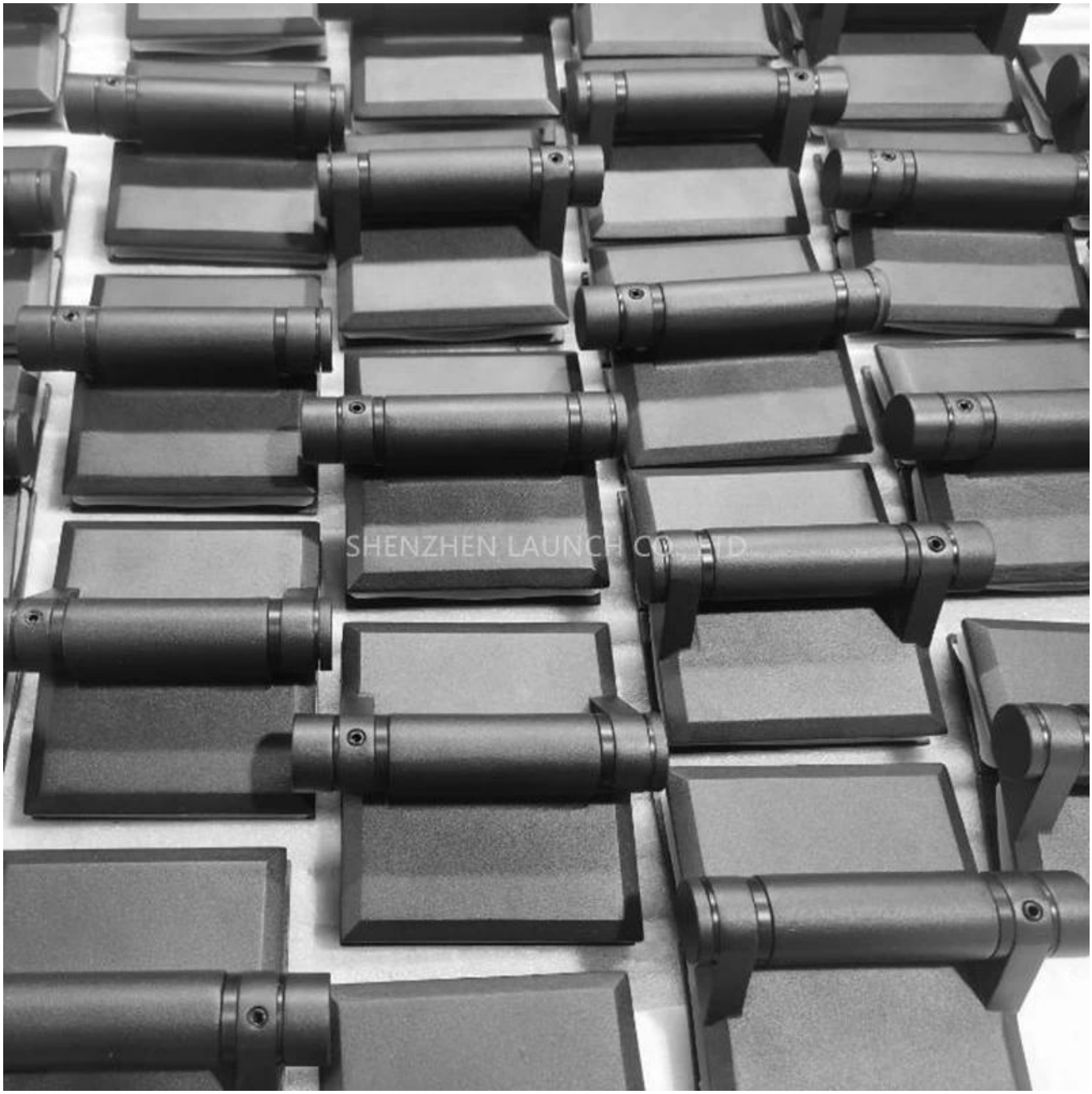

satin finish for G-G spring loaded hinge-

Mirror finish spring loaded hinge G-G

Dimension drawing for G-G glass hinge-

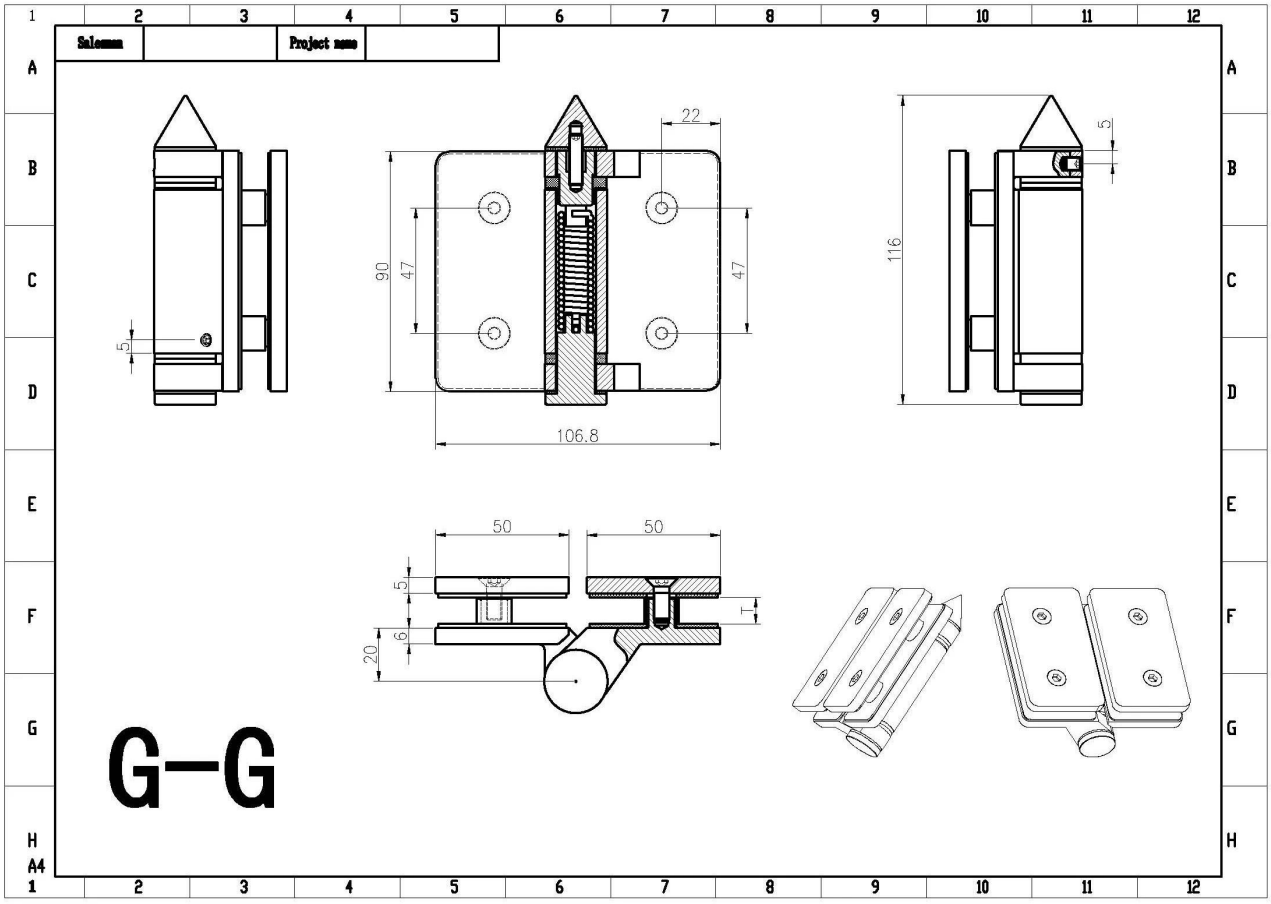

Project photos with G-G spring loaded glass hinges-