High Quality Balustrade Stainless Steel Adjustable Handrail Bracket

Product Description

Product Name	High quality balustrade stainless steel adjustable handrail bracket
Material	Stainless steel 316
Finish	Mirror polished or satin brushed
Mounting	Wall mounted handrail bracket
Model No.	P706
Adaptor plate	Radius adaptor plate and flat adaptor plate both available
Installation	Install on wall to support round or flat handrail pipe.
Application	Wall mounted handrail bracket for stainless steel railing, balcony,stairs,deck handrails
MOQ	No limit. Could order as per your job requirement.
Sample	Available to check quality before order
Factory Inspection	Available
Safety Packaging	Bubble bag - cardboard box - carton
OME & ODM Service	Available
Custom handrail bracket	Available. We are factory.

Adjustable Handrail Bracket Details

P706

Adjustable handrail bracket technetical drawing

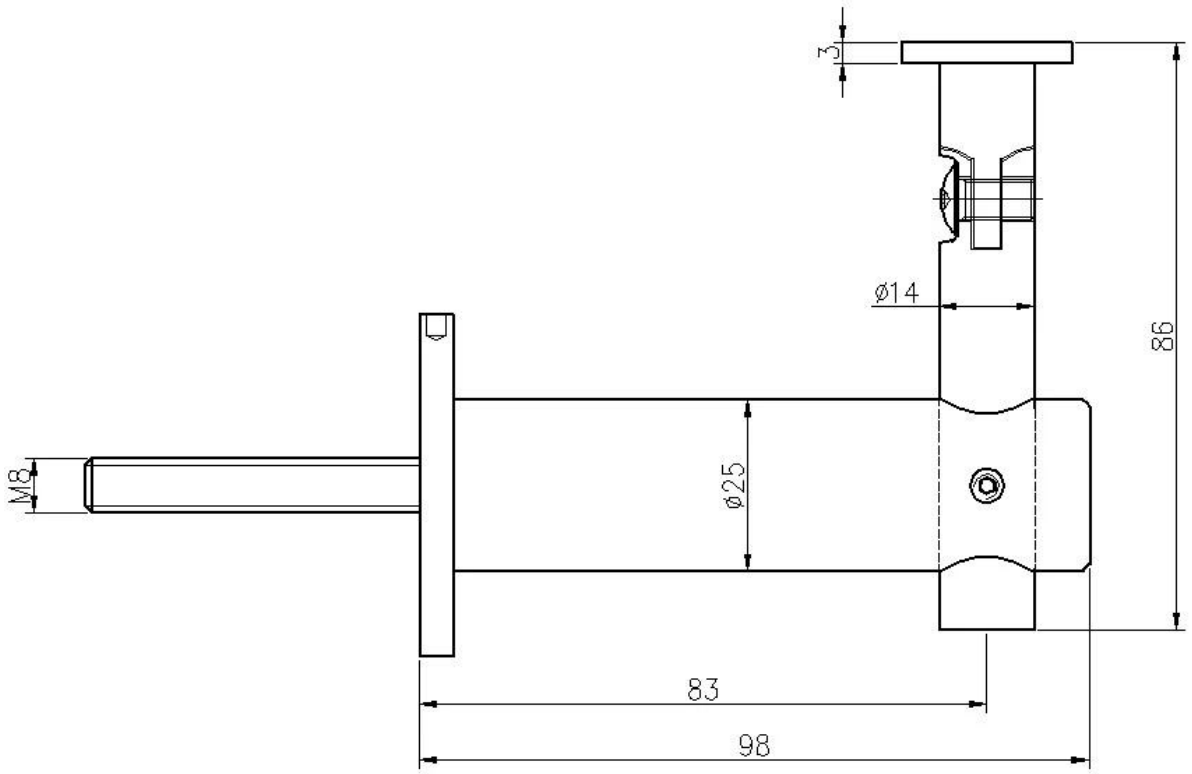

All handrail brackets we provided

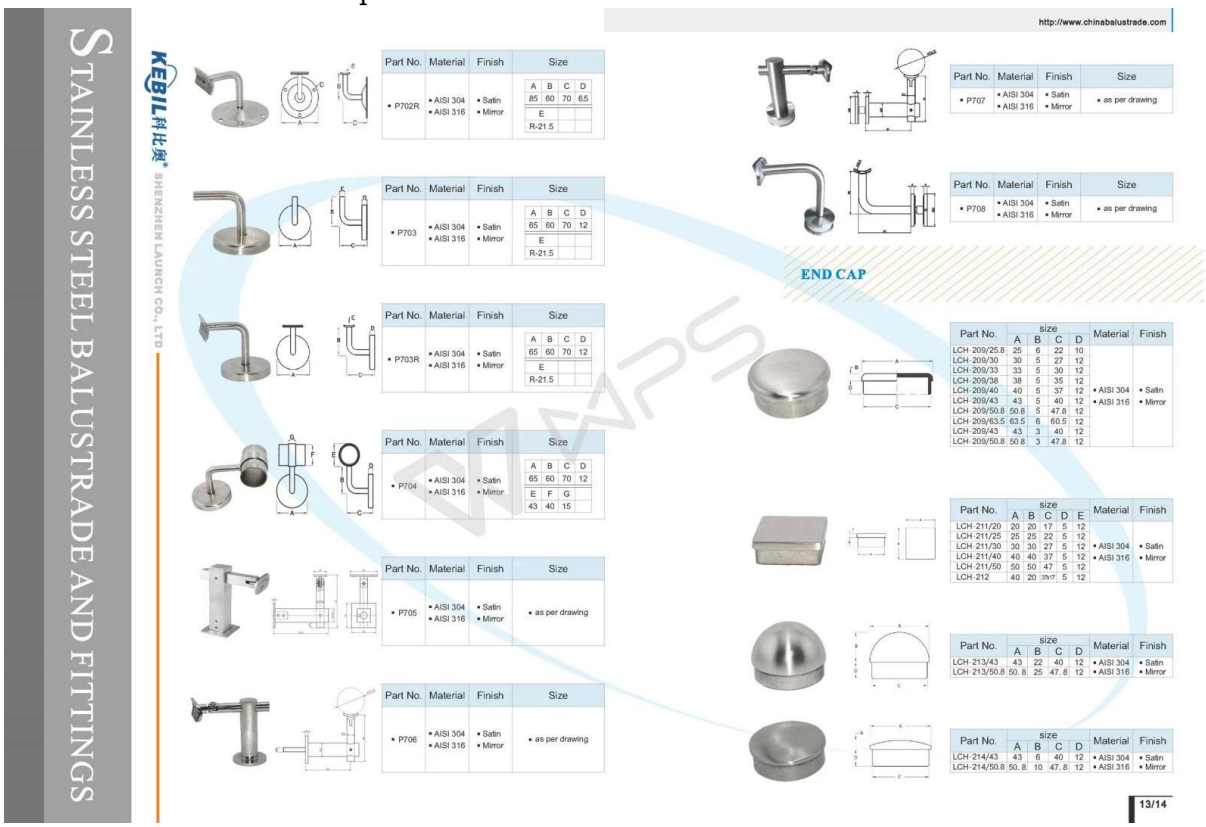

Adjustable Handrail Bracket Packaging

1. Bubble bag - cardboard box - carton
2. Or packing as customers' requorements.

FAQ

1.Are you factory?

Yes, we are factory.

2.Do you offer free samples?

Yes, we offer free samples, but customers need to pay express charges.

3.What materials do you have?

We have the material of stainless steel 304, 316, 316L and Duplex 2205.

4.What is your MOQ?

MOQ of order required is 1 pc.

5.What kind of payment do you accept?

We accept the payment of T/T, LC, PayPal, West Union, etc.

6.What is your payment term?

Our payment term is T/T□100% or 30/70□or L/C at sight .

7.What is your delivery time?

Our delivery time is from 5 days to 30 days based on your quantity.

8.Do you offer OEM & ODM service?

Yes we offer OEM&ODM service.

9.Do you offer after-sales service?

Yes, we offer after-sales service. Any complaint for orders will be dealt with in time within 12 hours.

Contact

Any enquiries or questions, please leave a message. Will get back to you as soon as possible!
For any urgent enquiry, please get in touch as below:

-Email: sales04@launch-china.cn
-Tel: (86-755) 8603 7559
-Skype: launch_04
-Mob/whats APP: +86-1353050626
-Wechat: Doris_dp

KEBIL科比奥®

深圳市朗驰商贸有限公司
SHENZHEN LAUNCH CO., LTD.
朗驰国际有限公司
LAUNCH INTERNATIONAL LIMITED.

董 萍 Doris Dong

Senior Sales Representative

(86) 135 3050 6265

深圳市南山区南山大道1092号亿利达大厦B区3栋5003

Room 5003, Building 3, Yilida Building, No.1092 Nanshan Road, Nanshan District, Shenzhen, China postal code 518054

(86-755) 8603 7559

(86-755) 8637 2611

sales04@launch-china.cn

www.launch-china.com

www.chinabalustrade.com