Duplex 2205 stainless steel adjustable glass spigot for frameless swimming pool fencing

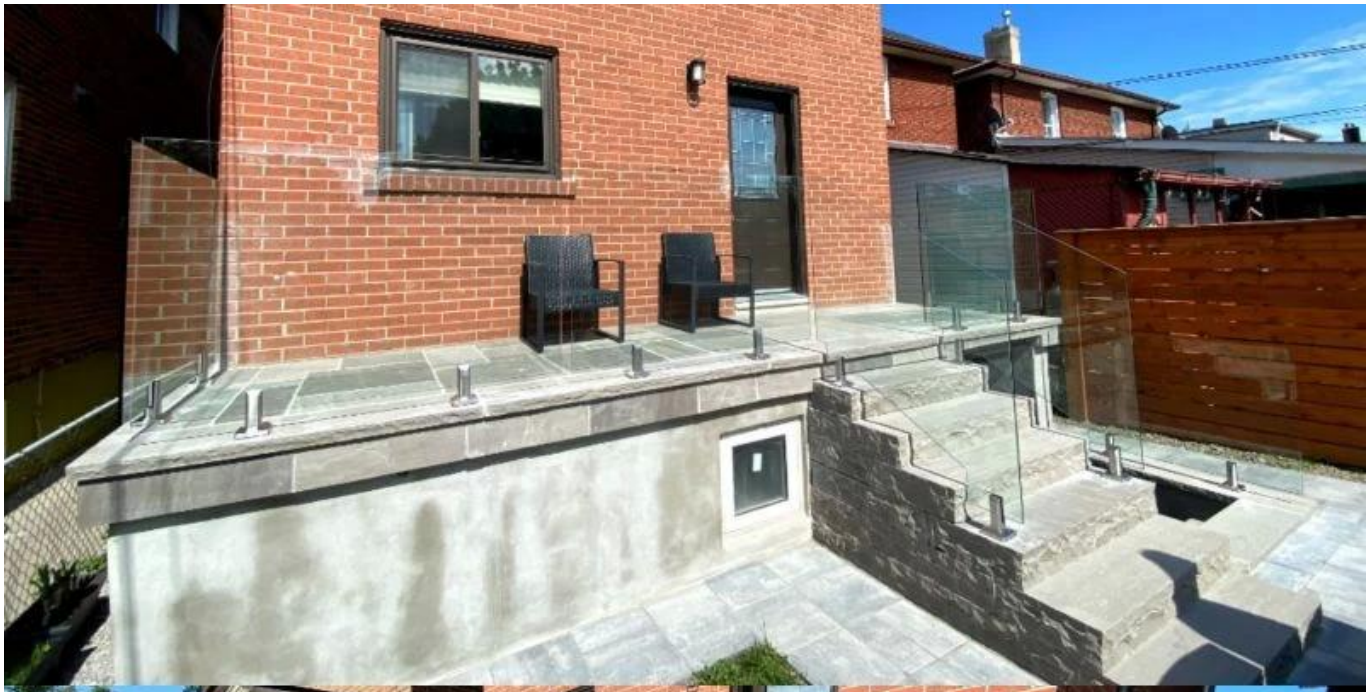

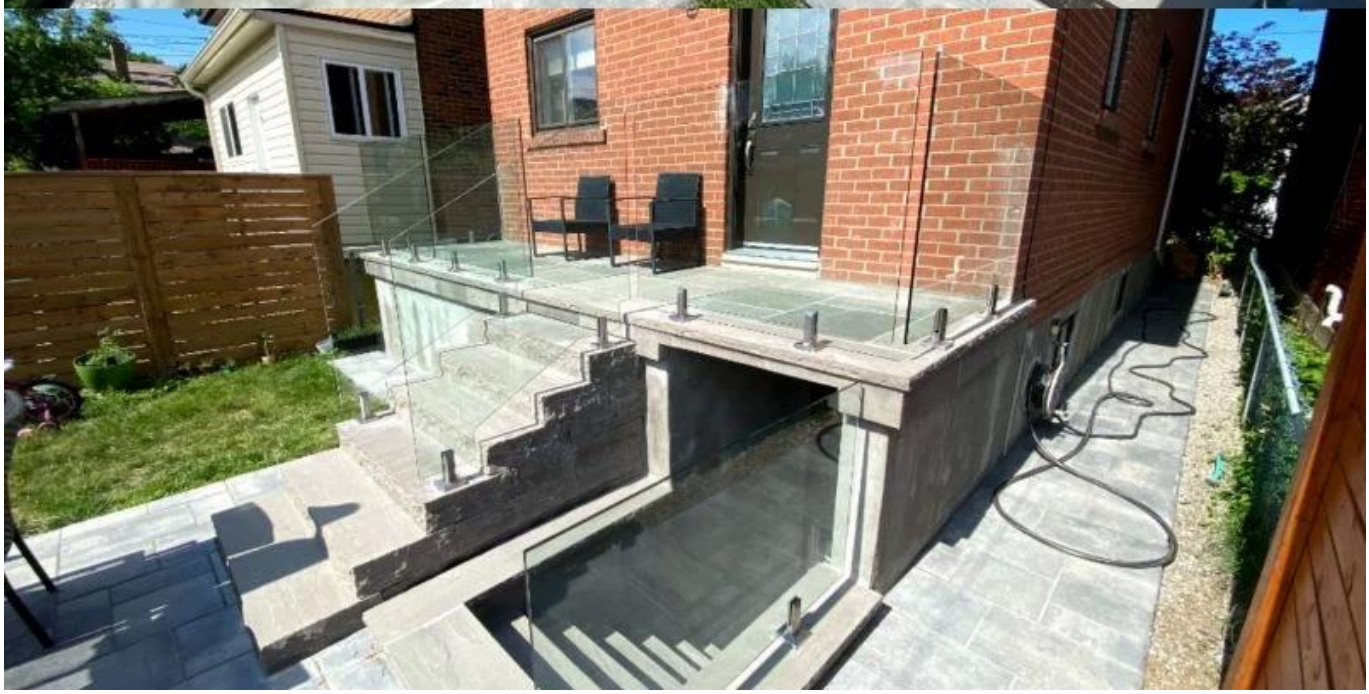

Product show

Satin surface

SX-7001D
1330
g
lb
oz
s
NET
PCS
UNIT
ON/OFF
ZERO
TARE
PWE
Electronic Compact Scale

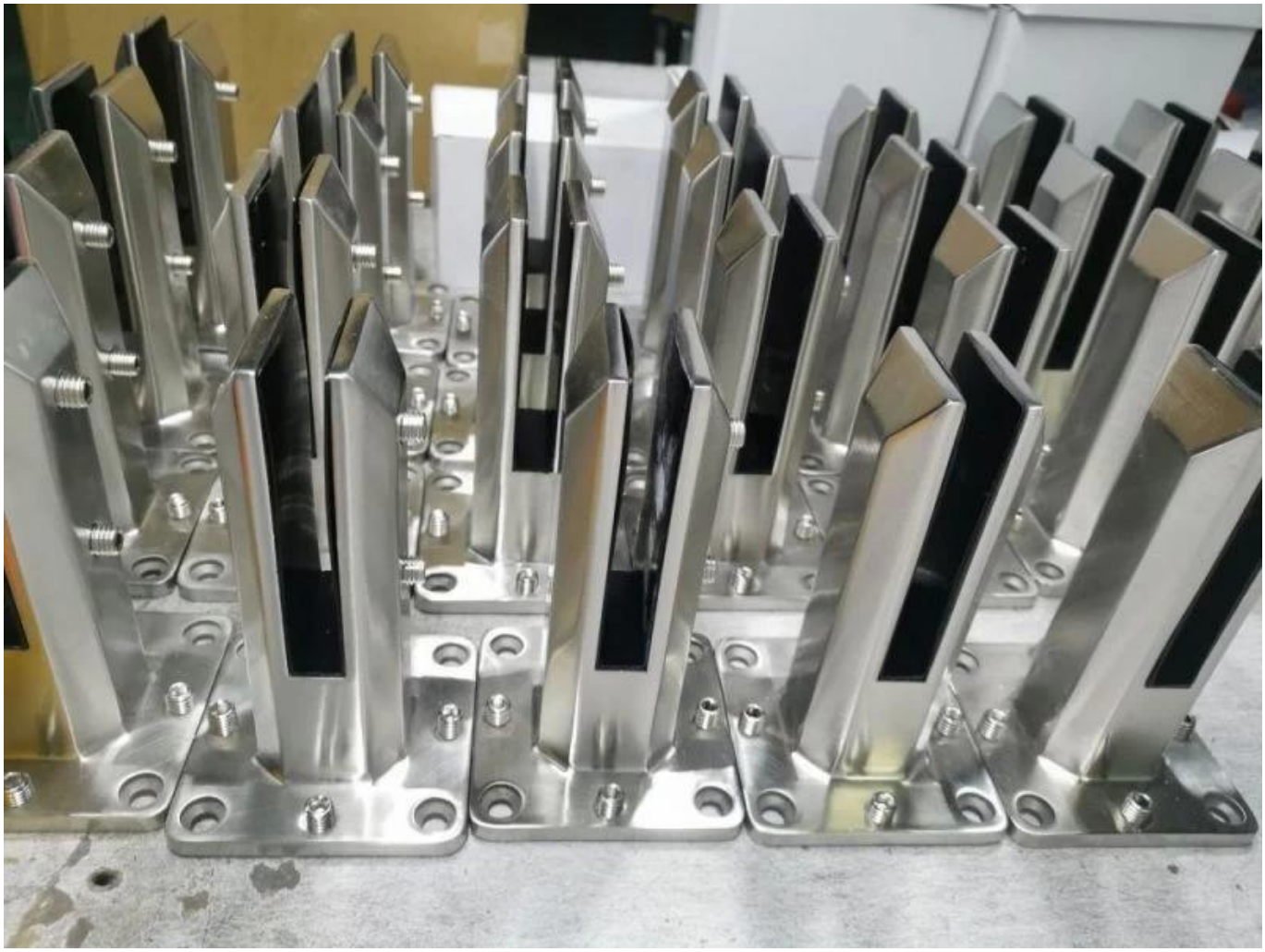

Matt black surface

Technical drawing

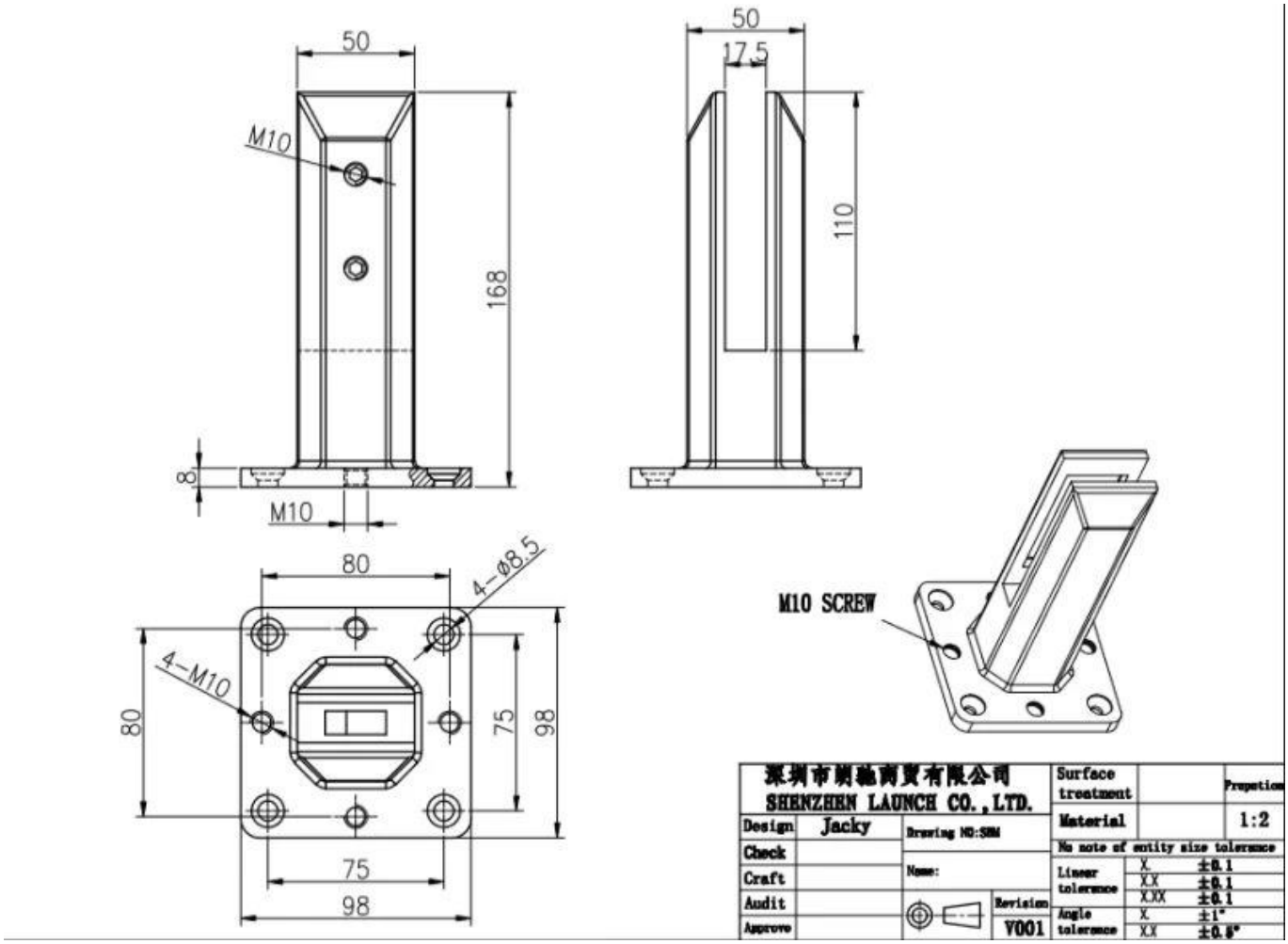

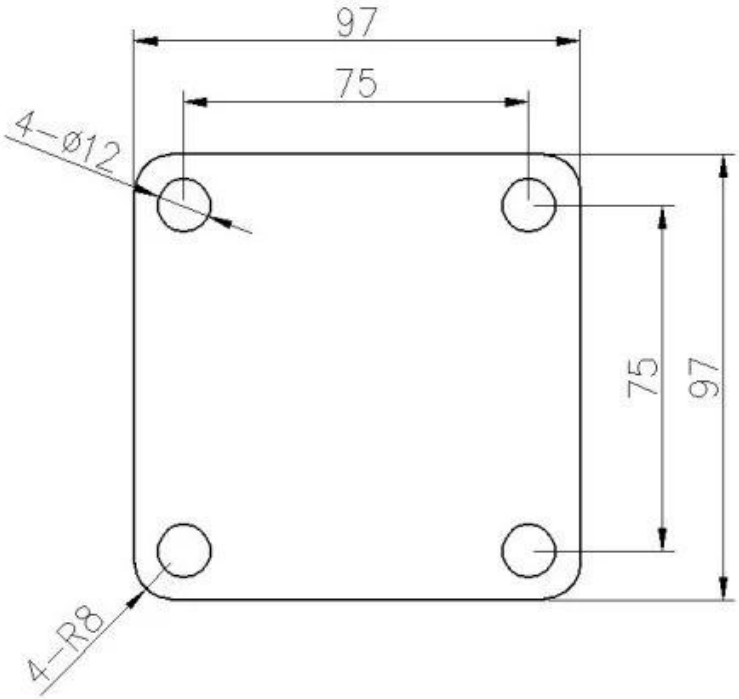

Application photo

Other related glass spigots

Surface finish
Satin

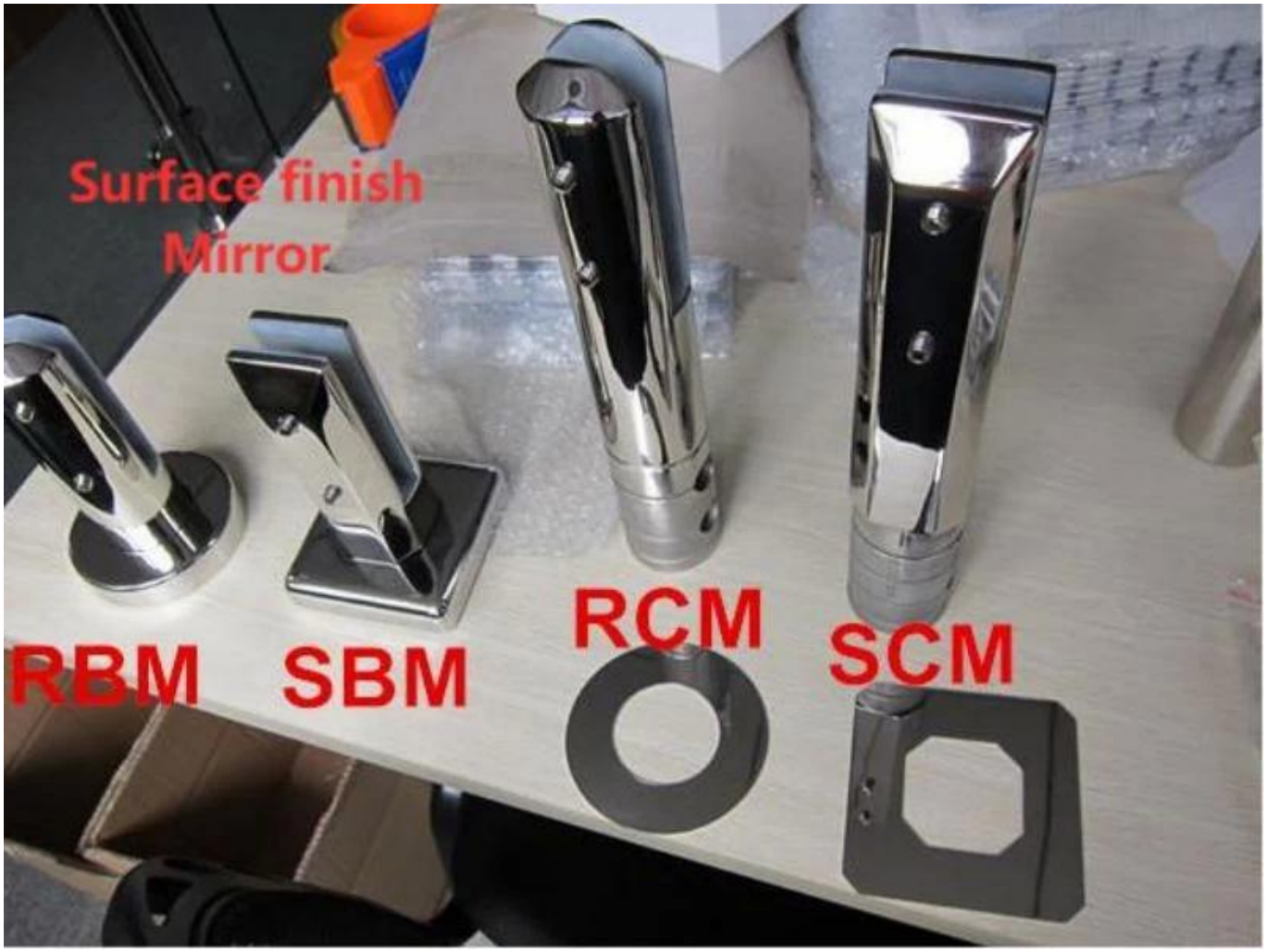
Surface finish
Mirror
RBM
SBM
RCM
SCM

Please feel free to contact me when you are interested in them.

Frank Fang

sales02@launch-china.cn

WhatsApp/Phone/Wechat: +8615906261741