Spring-loaded Adjustable 180° Glass-to-Glass Pool Hinge

Features-

- Model No. G-G
- Material . 316 stainless steel
- Max. door leaf weight 30kg per pair of hinge
- Max. door leaf width 900mm
- Spring can be adjusted for closing speed control

Glass weight for reference for Spring-loaded Adjustable 180° Glass-to-Glass Pool Hinge
-

Glass thickness	8mm	10mm	12mm	14mm
weight (kg/□□	18.2	22.7	27.3	31.8

Matte Black powder coating finish for G-G Spring-loaded Adjustable 180° Glass-to-Glass Pool Hinge
-

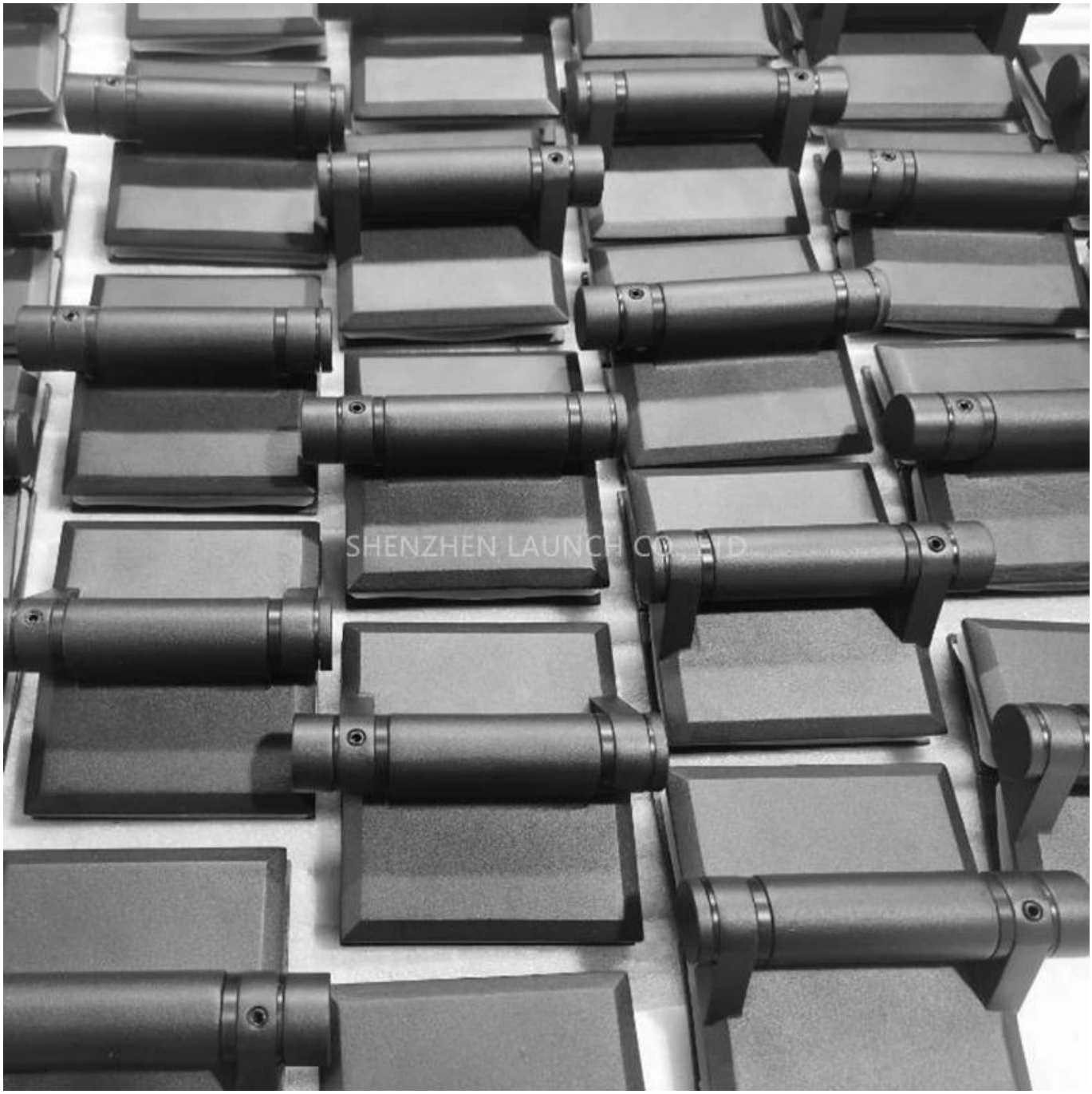

satin finish for G-G

Spring-loaded Adjustable 180° Glass-to-Glass Pool Hinge

Mirror finish Spring-loaded Adjustable 180° Glass-to-Glass Pool Hinge-

Dimension drawing for G-G Spring-loaded Adjustable 180° Glass-to-Glass Pool Hinge

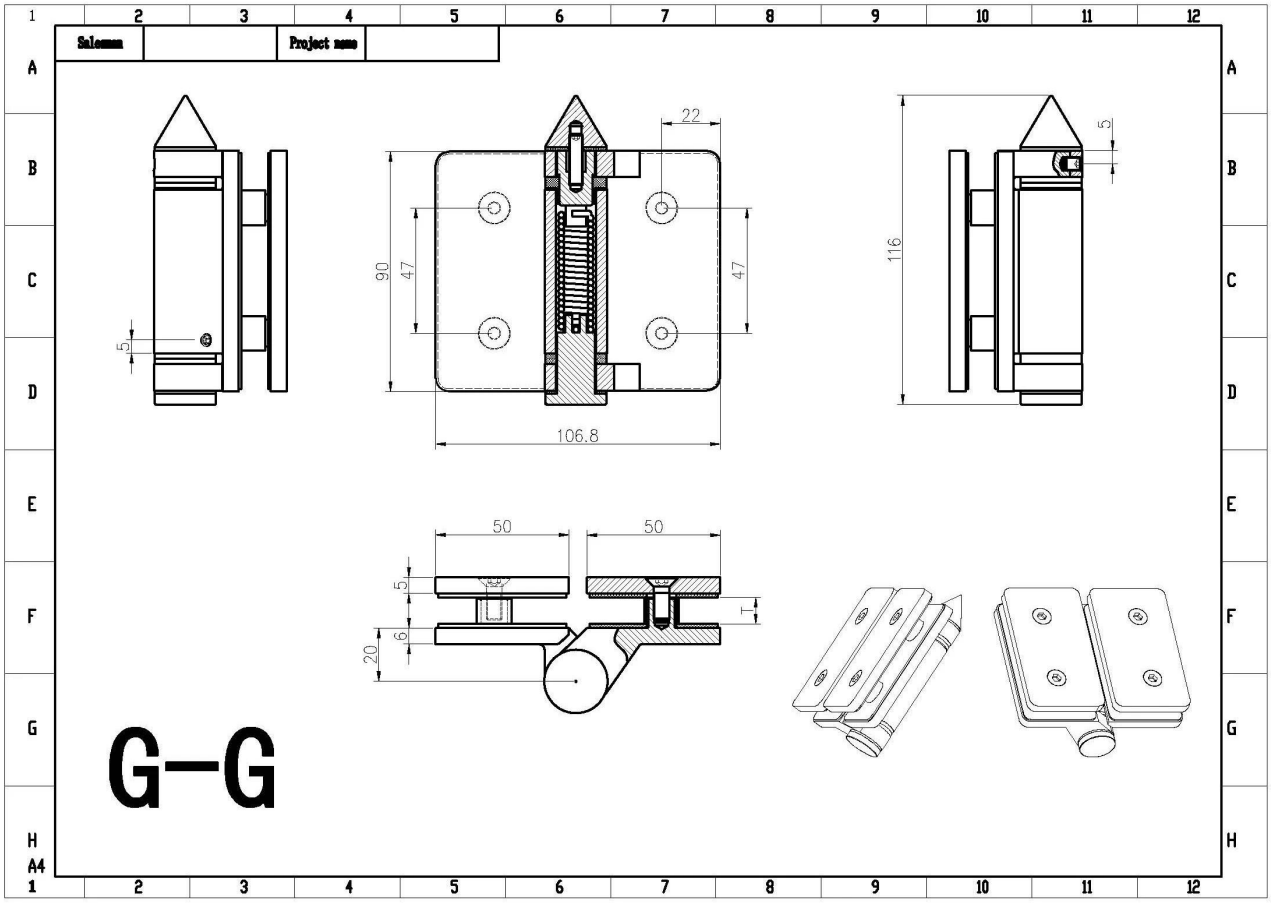

Project photos with G-G

Spring-loaded Adjustable 180° Glass-to-Glass Pool Hinge