Stainless Steel 304 or 316 Black Matte Square Balustrade Post Modern Glass Railing Design

1	Material & Finish	Stainless steel 304/316; Satin or mirror finish or matt black
2	Height	1000MM / Custom size
3	Stanchion Post	50*50*1.5(mm) tube; 4 way adjustable top rail bracket; Square or Round Glass Clamp.
4	Top Rail	50*50*1.5(mm) Hollow Tube
5	Security Railing	8mm/10mm/12mm Tempered Clear Glass Panel
6	Usage & Location	Baluster, Balustrade, Banister, Fence, Handrail, Railings; Balcony, Bridge, Deck, Garden, Patio, Pool, Porch, Stair, Terrace
7	Installation	Top/Side mounted
8	Package	EPE+Inner box+Carton

9	Service	1, Matchable accessories and fittings are provided ; 2, Construction planning; 3, Professional engineer advices; 4, Installation guiding; 5, OEM, ODM , Customer design;
10	Contact	EMAIL, SKYPE, WhatsApp, WeChat and QQ are shown as watermark on pictures below

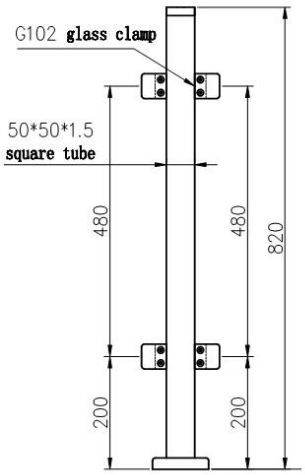
G102 glass clamp
50*50*1.5
square tube
480
480
820
200
200

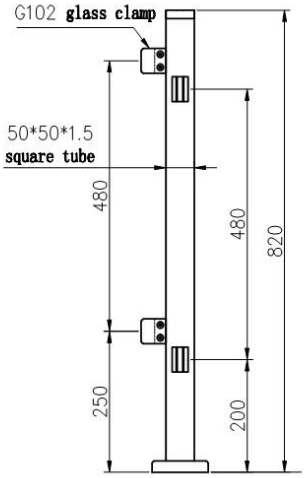
G102 glass clamp
50*50*1.5
square tube
480
480
820
250
200

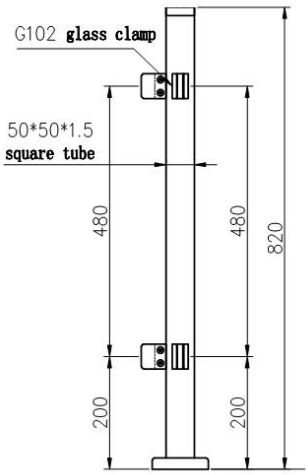
G102 glass clamp
50*50*1.5
square tube
480
480
820
200
200

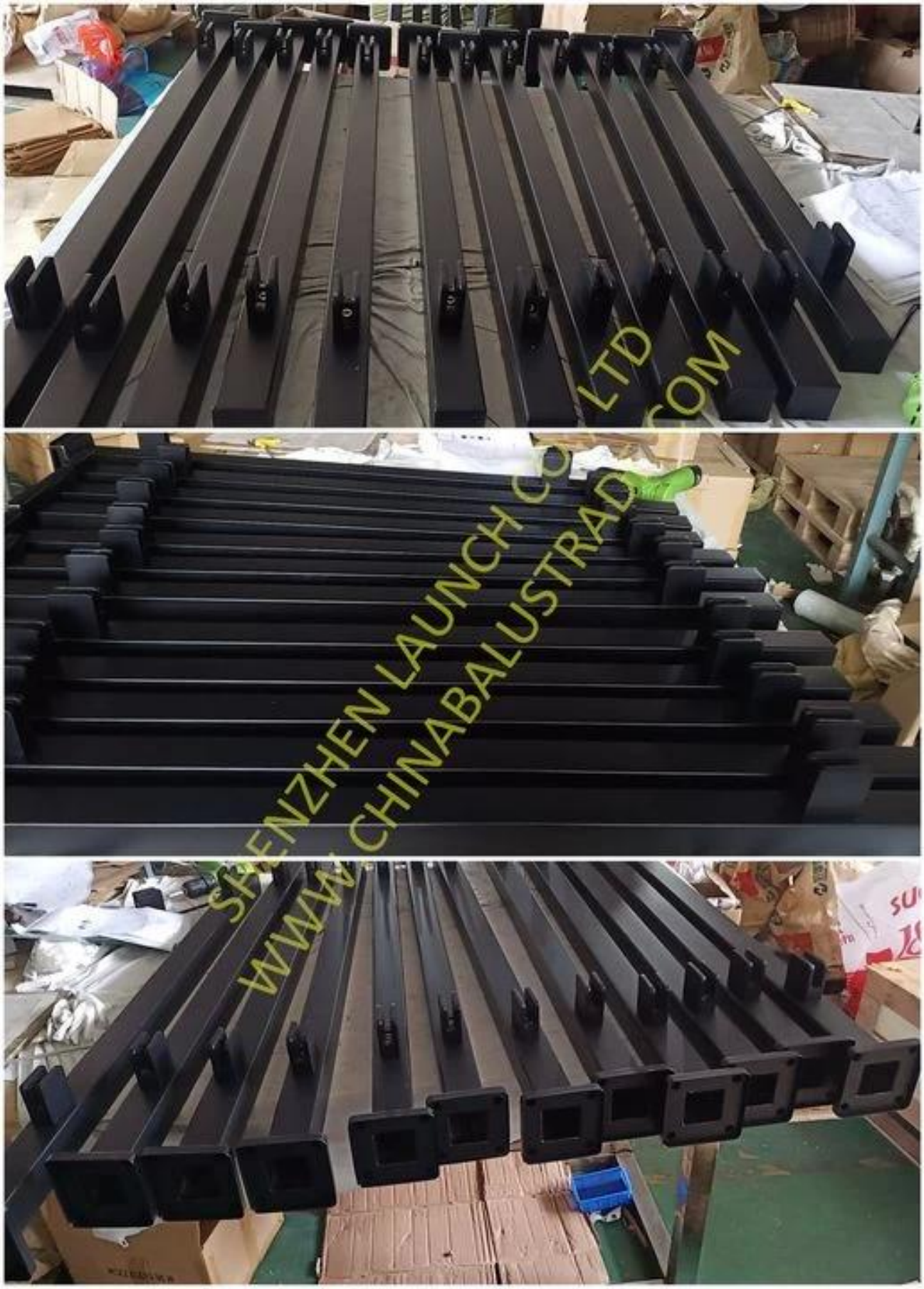

Project show

KEBIL科比奥

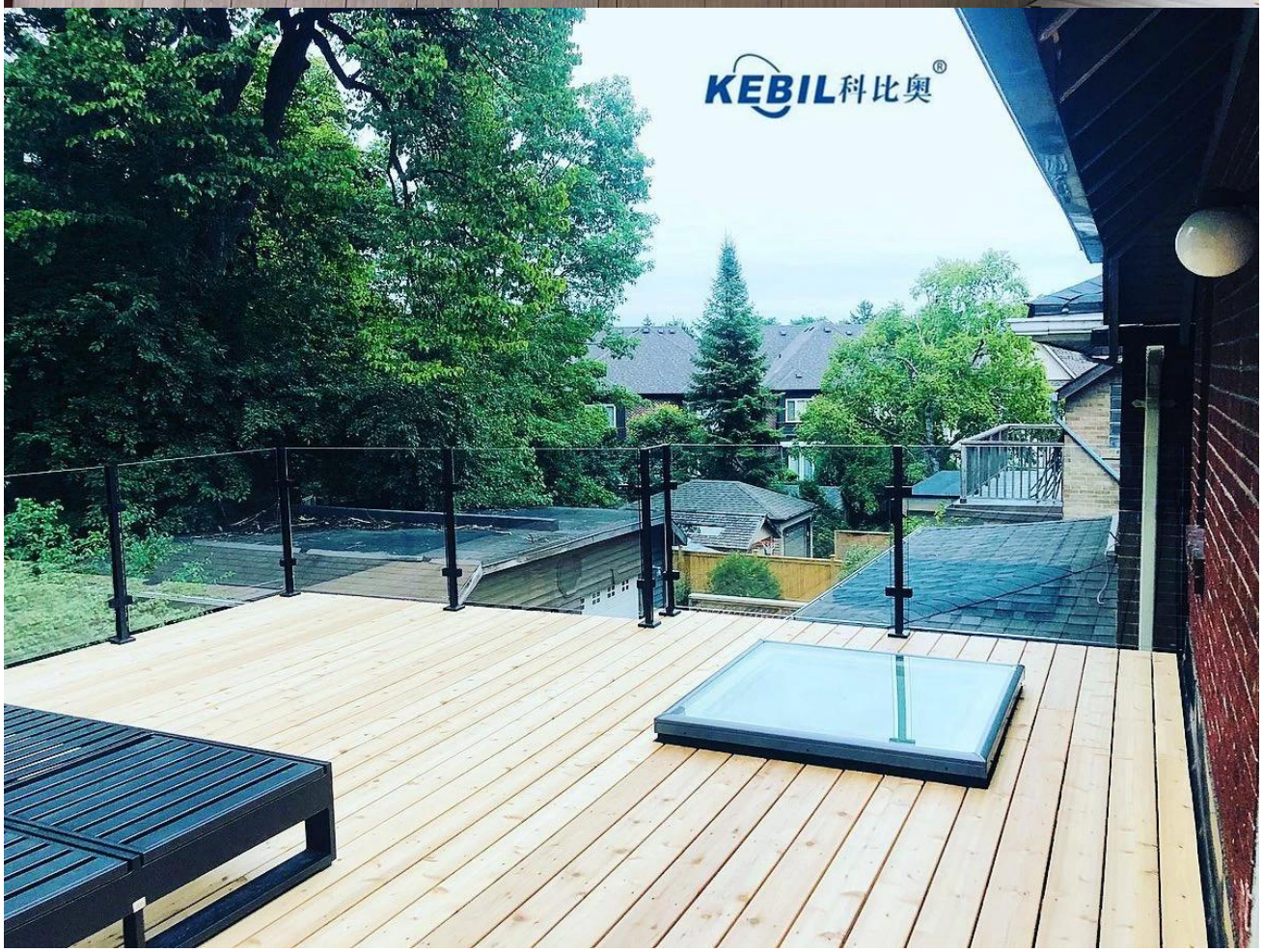
KEBIL科比奥®

Feel free to contact us:
Wendy
sales04@launch-china.cn
WhatsApp/WeChat: +8615989339827