Product specification:

Product name	Stainless Steel Glass To Wall 90 Degree Corner Glass Clamp Clips
Material	Stainless steel 316 or 304
Surface finish	Satin brushed, mirror polished, matt black, gloss black, gold etc.
For glass thickness	10-12mm, other customized glass are available
Mounted	Glass to wall
Railing types	Mostly used for frameless glass railing
Application	Swimming pool fencing, balcony glass railing, etc.

Product show:

Techinal Drawing:

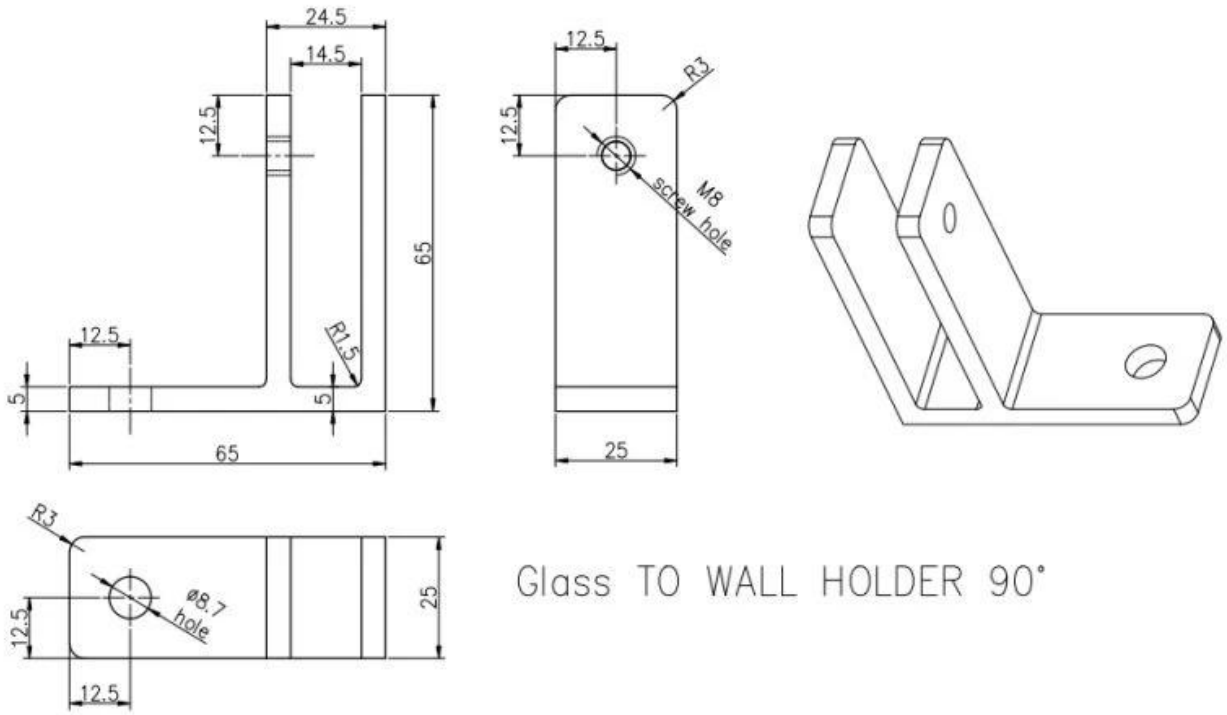

Porduction photos:

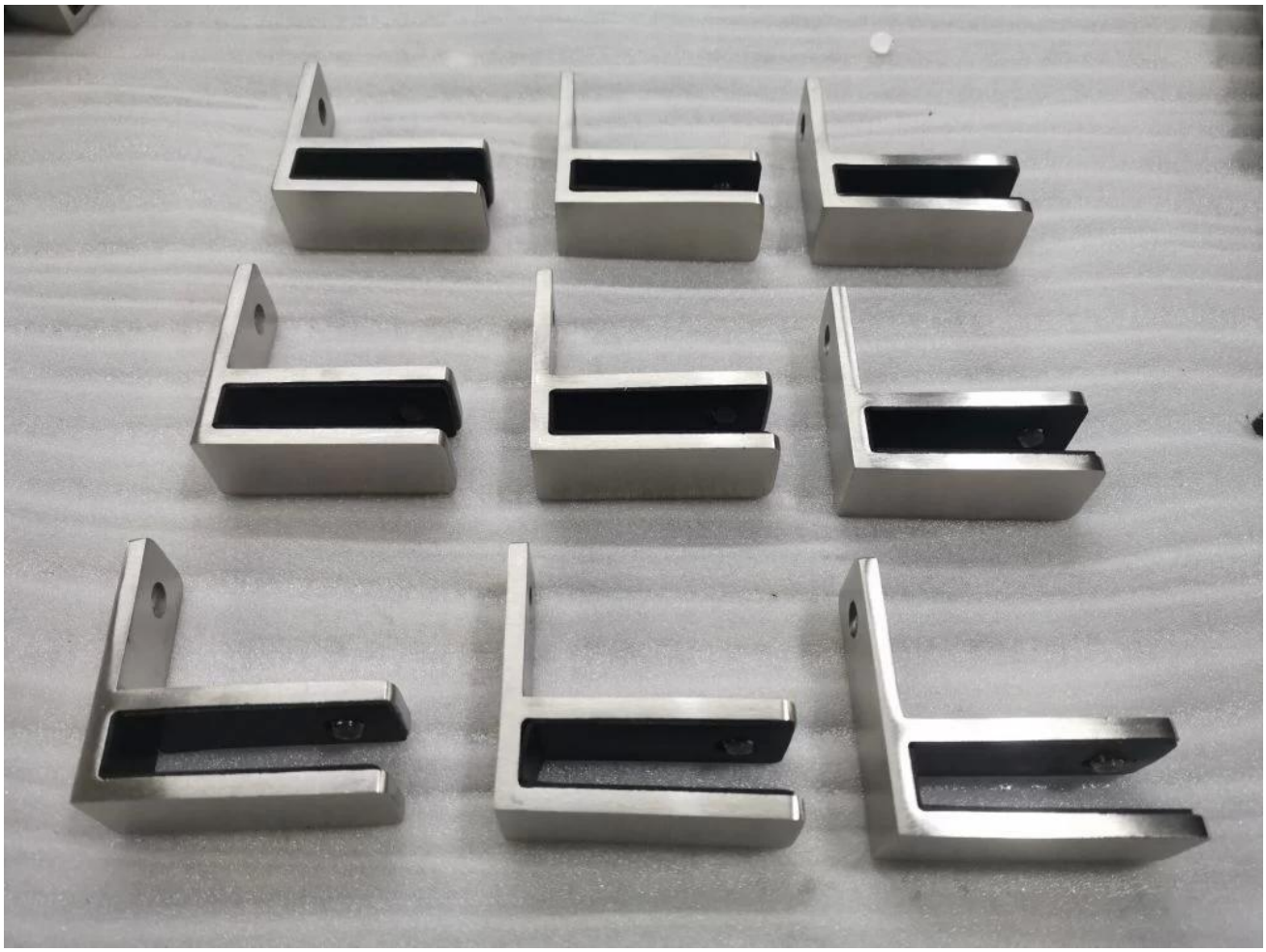

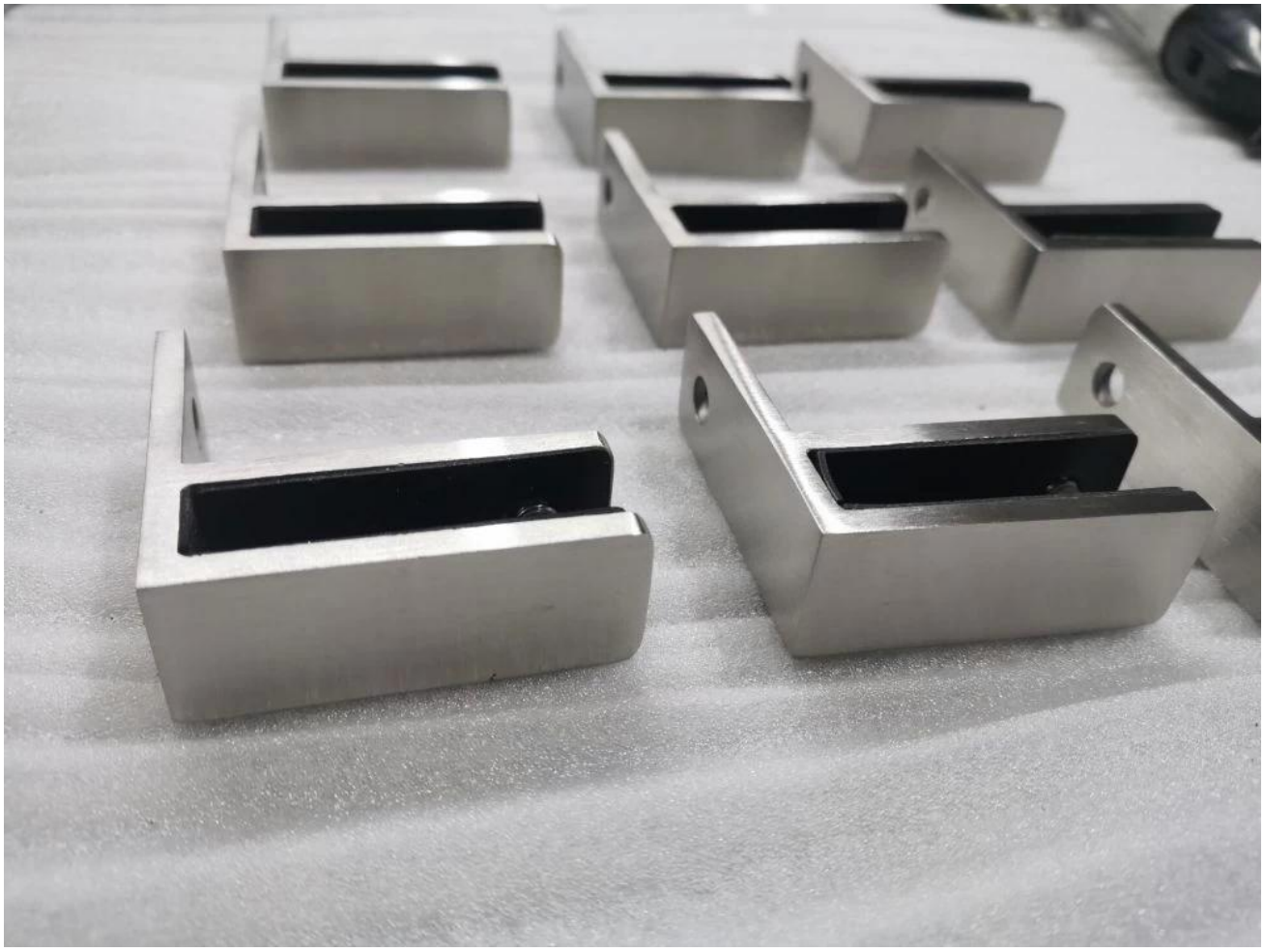

Contact information:

If you have any inquiries for them, please feel free to contact me.

Wendy
Email: sales04@launch-china.cn
Phone/WhatsApp/Wechat: +0086 159 8933 9827