Product Specs.

Product name	90 degree glass to wall glass clamps
Material	Stainless steel 316 or 304
Surface finish	Satin brushed, mirror polished, matt black, etc.
For glass thickness	10-12mm, other customized glass are available
Mounted	Glass to wall
Railing types	Mostly used for frameless glass railing
Application	Swimming pool fencing, balcony glass railing, etc.

Product Show

Small M8 screws with plastic end for the glass clamp

Technical drawing

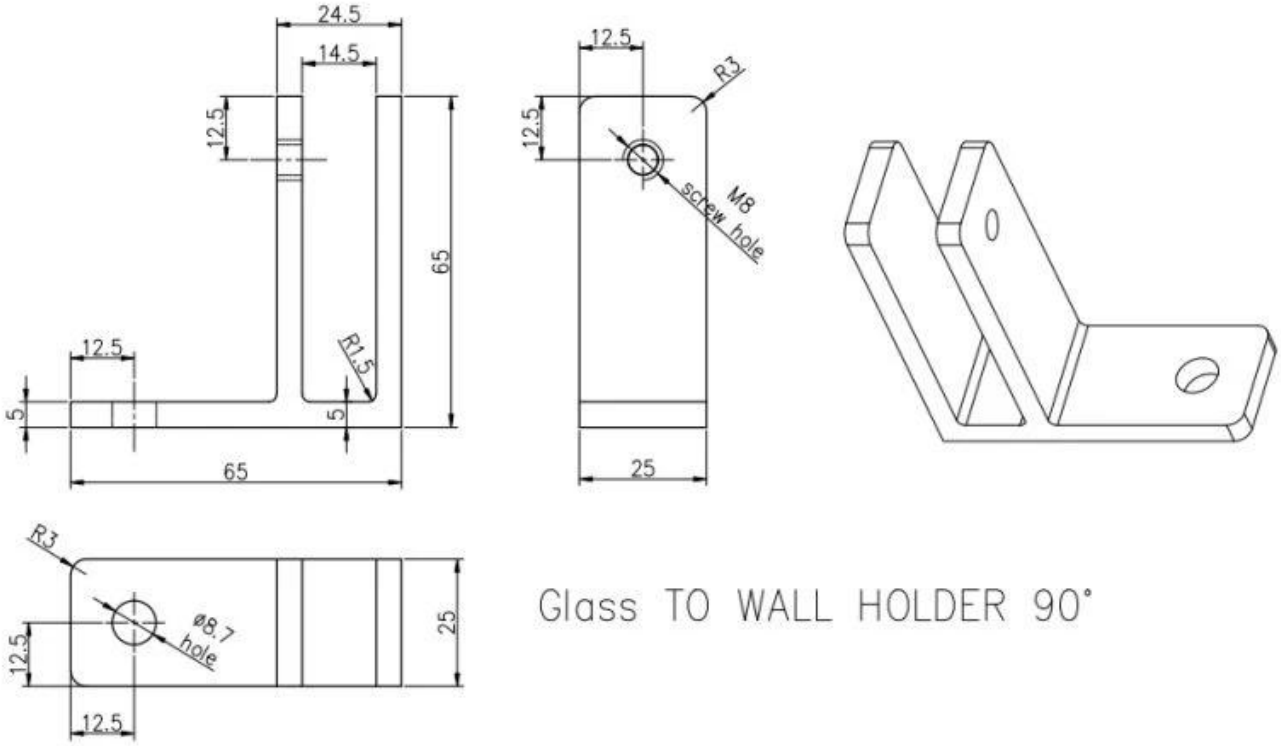

Mass production

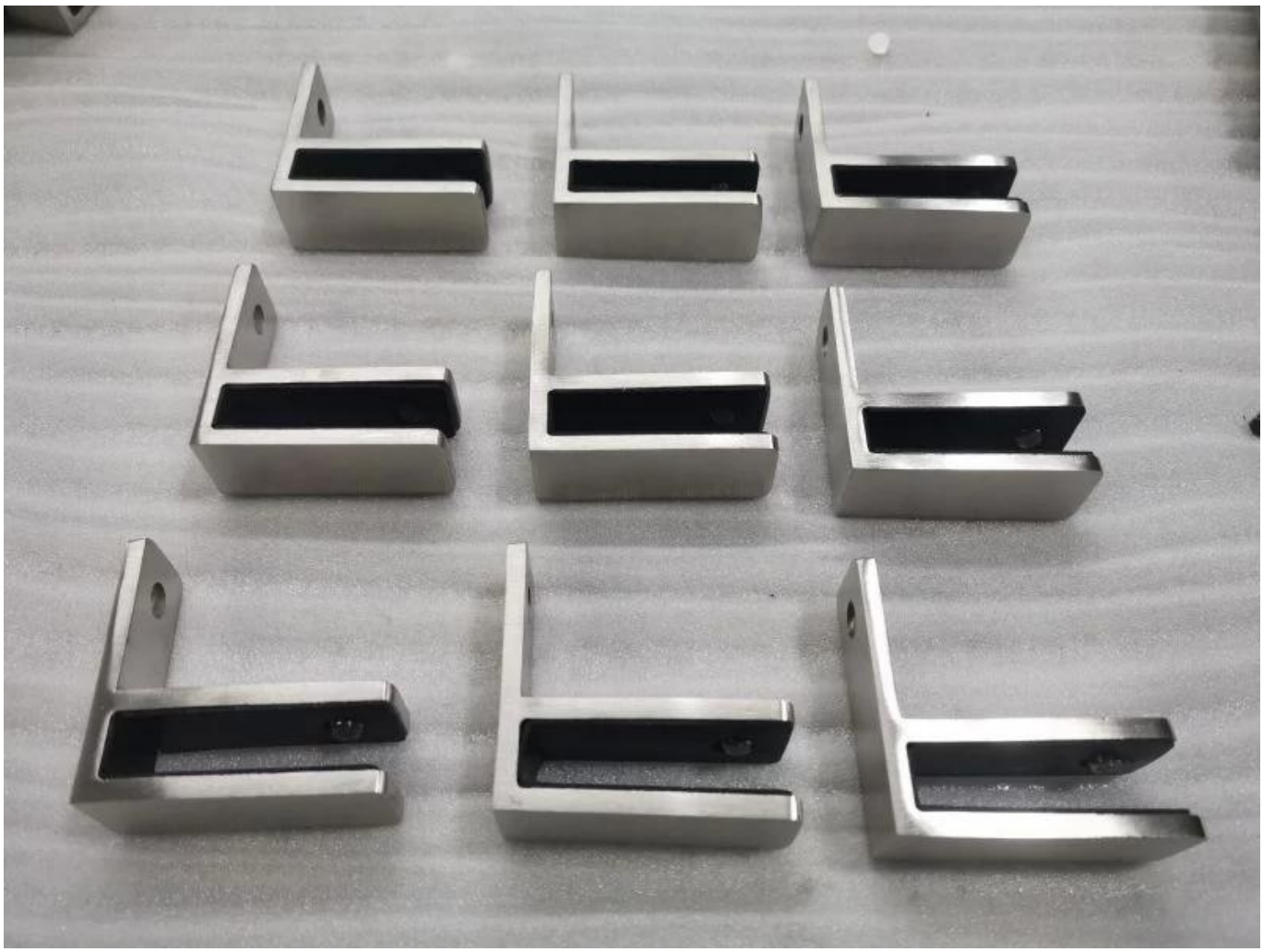

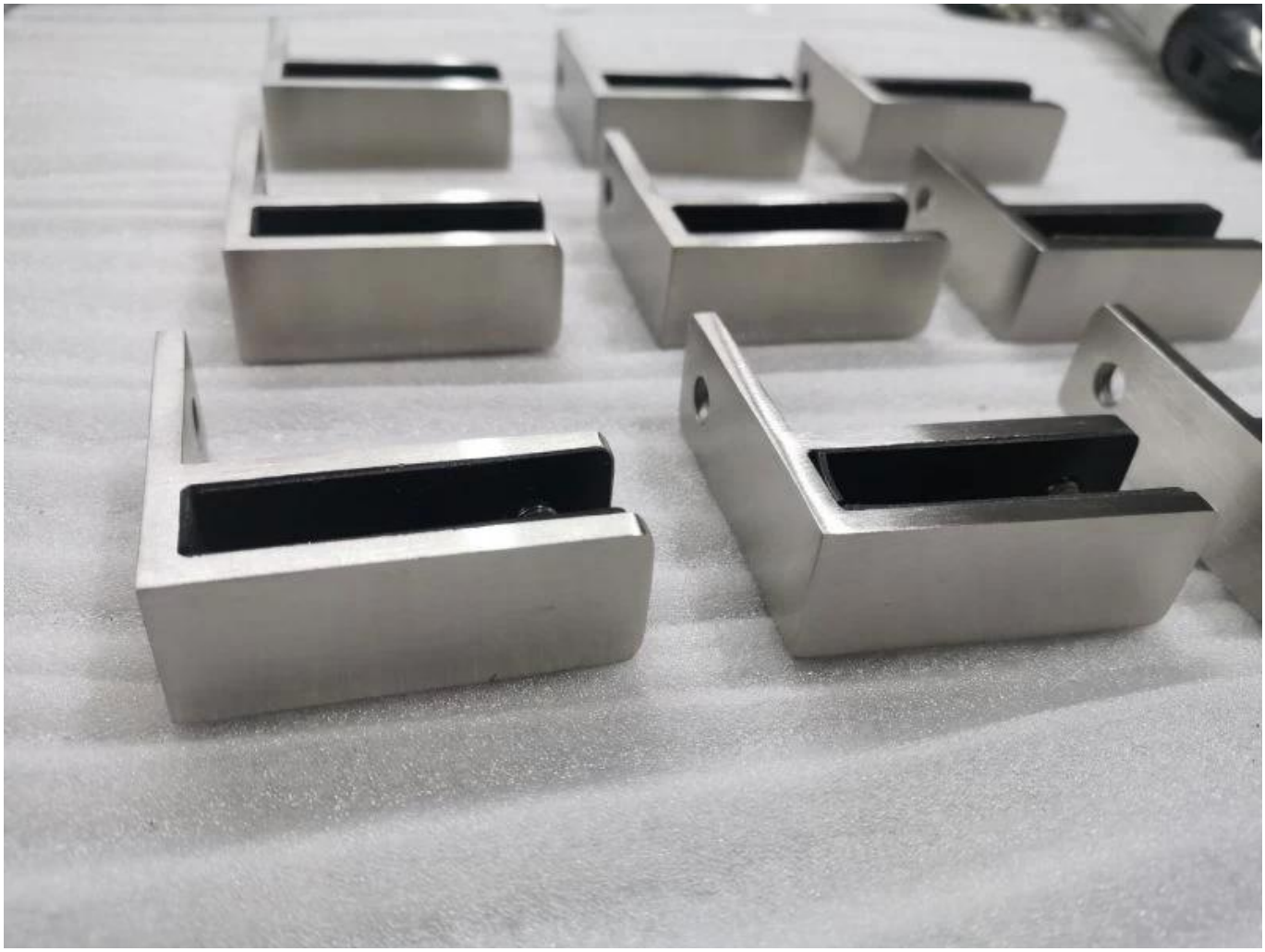

Other types of glas clamps

G102

G103/G104

G105

G108R

PV-90

CB-180

BC-60

BC-80×35

CB-90

Mass production

Project photo

If you have any inquiries for them, please feel free to contact me.

Frank Fang
Email: sales02@launch-china.cn
Phone/WhatsApp/Wechat: +8615906261741