Automatically closing glass to glass door hinge
1.SS316 material
2. fit 8-10mm glass door
3.available in brushed and mirror finish
4.glass to round post hinge and glass to wall hinge available
5.fittings including 1 caps and 1 Allen key and 1 adjusting pin

Specifications:

Item name	Glass to glass hinge	Glass to wall or square post hinge	Glass to round post hinge
Item number	GH-G	GH-S	GH-R
Picture			
Dimension	77.5*81.25mm	77.5*84.25mm	77.5*84.25mm
Weight	0.46kg	0.38kg	0.4kg
Accessories available	1 cap; 1 pin; 1 allen key	1 cap; 1 pin; 1 allen key	1 cap; 1 pin; 1 allen key
Fittings photo			

Drawing:

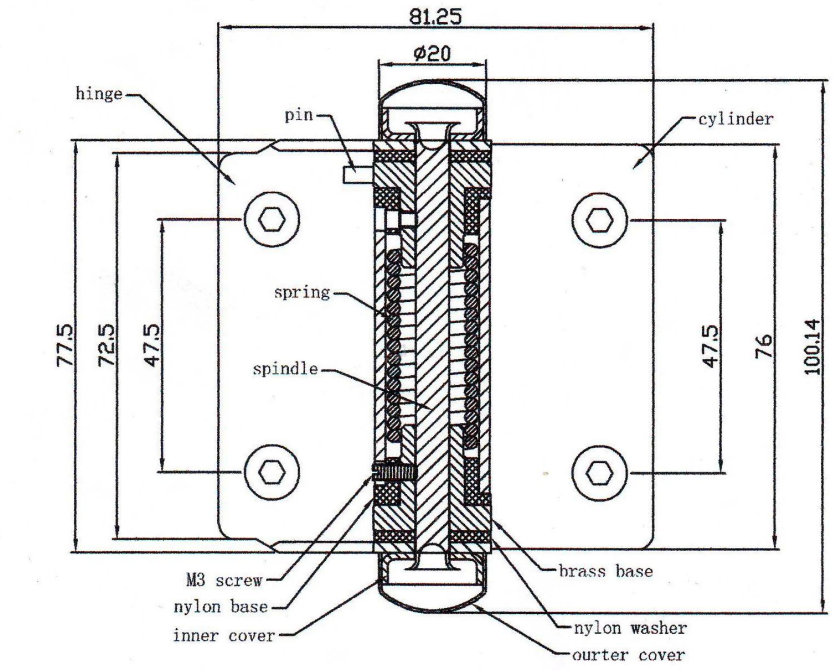

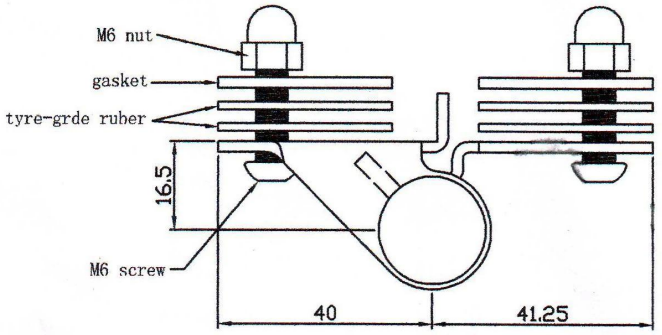

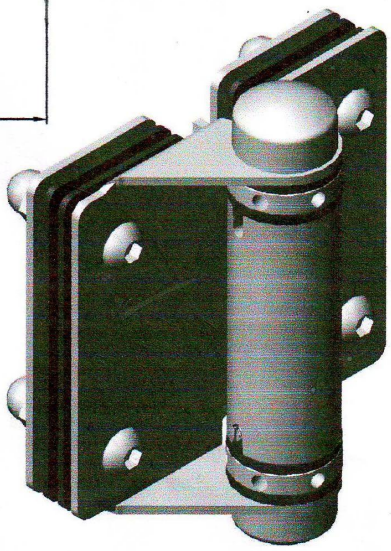

product show:
mirror finish

brushed finish

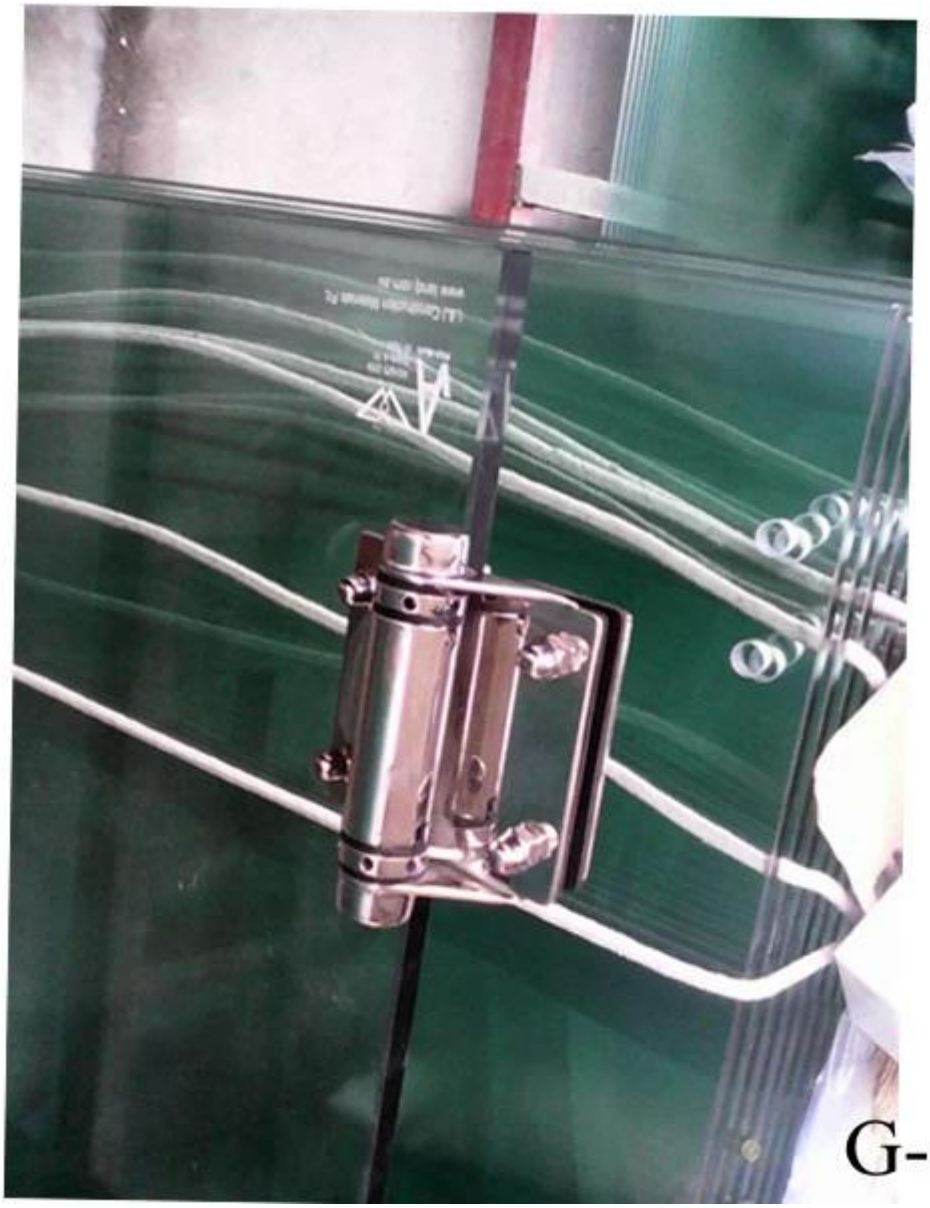

G-G1

G-G1

packing details:
1 pair of glass hinges/inner box
12 boxes/carton

Other type of glass hinge

1.glass to wall hinge

[stainless steel glass door hinge and latch china manufacturer,8-10mm tempered glass door hinge and latch for pool fence]

2.glass to round post hinge

10-12mm glass door hinges available

1.glass to glass door hinge 180 degree

[stainless steel 316 glass door hinge for pool fencing,1/2" glass door hinge for glass balustrade]

2.glass to round post

G-P2

3.glass to wall hinge

We also have glass latch
1.glass to glass latch 180 degree
[stainless steel glass door latch for 8-10mm pool fence,stainless steel glass door hinge and latch china manufacturer]

pool fence system glass latch

2.glass to round post latch
framless glass pool fencing glass latch for round post, glass to round post latch for frameless glass pool fence

GL-P

3.glass to wall latch

glass door latch

glass spigot

[stainless steel duplex2205 glass spigot for salf pool fence china manufacturer,china duplex2205 round base plate glass spigot 12mm]

frameless glass balustrade

[china duplex 2205 glass spigot for swimming pool fencing,duplex square core drill glass spigot for 12mm glass railing]

core drill and base plate spigot