316 stainless steel heavy duty spring loaded glass hinge for swimming pool fence glass gates .

Features of Glass hinge for swimming pool fence-

Type	Glass to glass hinge
Function	spring loaded type glass hinge
Model No.	G-G
Material	316 stainless steel
Finish	satin , mirror , powder coating , electro plating
For glass thickness	8mm 10mm 12mm
Max. door leaf weight	30kg
hinge cap	flat caps or coned caps
MOQ	1 pair
Other hardwares available for pool fence	glass latch , glass spigot

Glass to glass hinge photo , matt black powder coating-

SHENZHEN LAUNCH CO., LTD

SHENZHEN LAUNCH CO., LTD

SHENZHEN LAUNCH CO., LTD

Dimensions for glass to glass hinge -

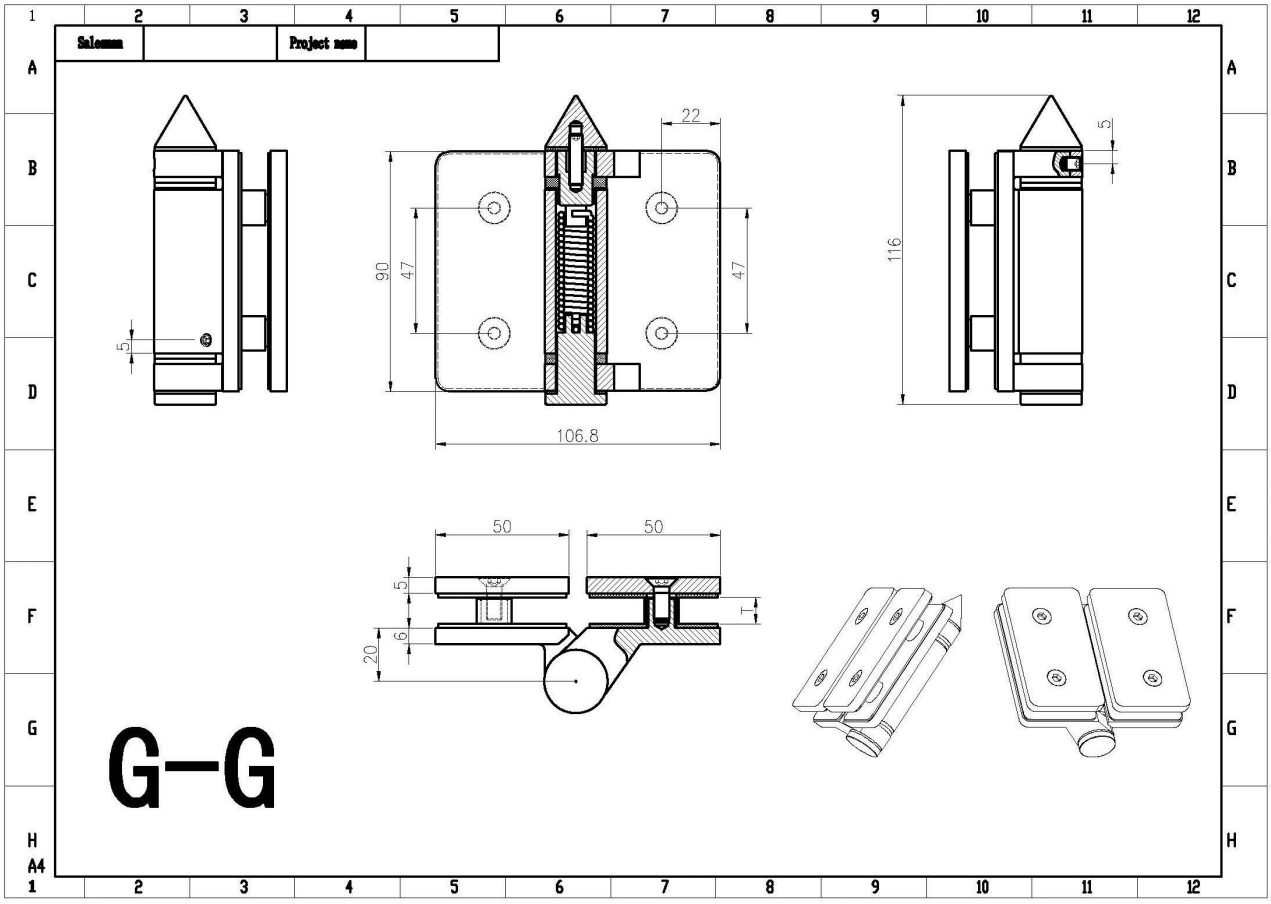

Installation instructions for glass to glass hinge-

KEBIL科比奥
www.launch-china.cn

Instructions for adjusting tension on Glass to Round post hinge

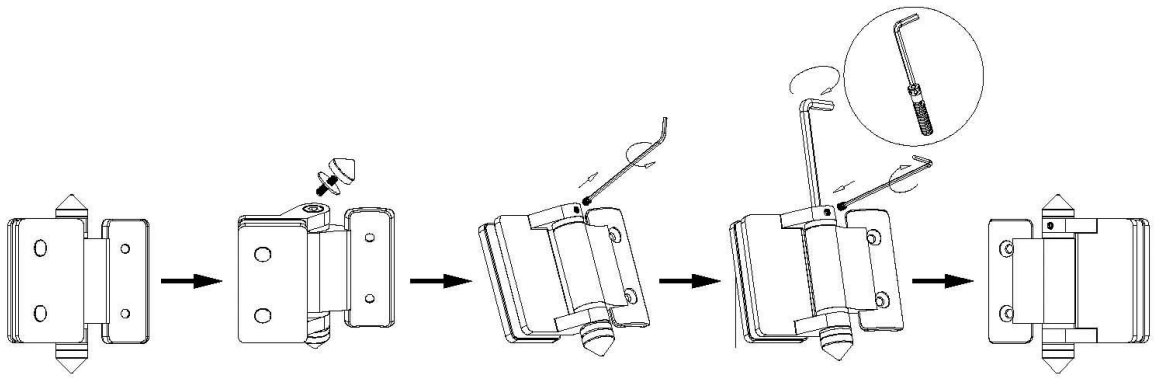

STEP 1
Remove cone and grub screw by turning anticlockwise to reveal tension pin.

STEP 2
Remove grub screw from side of hinge with Allen Key supplied.

STEP 3
Turn the tension pin clockwise to the next hole in tension pin,then tighten the grub screw, repeat this process a Maximum of three times or 360°, Do not over tension.

Glass hole drawing for hinge & latch-

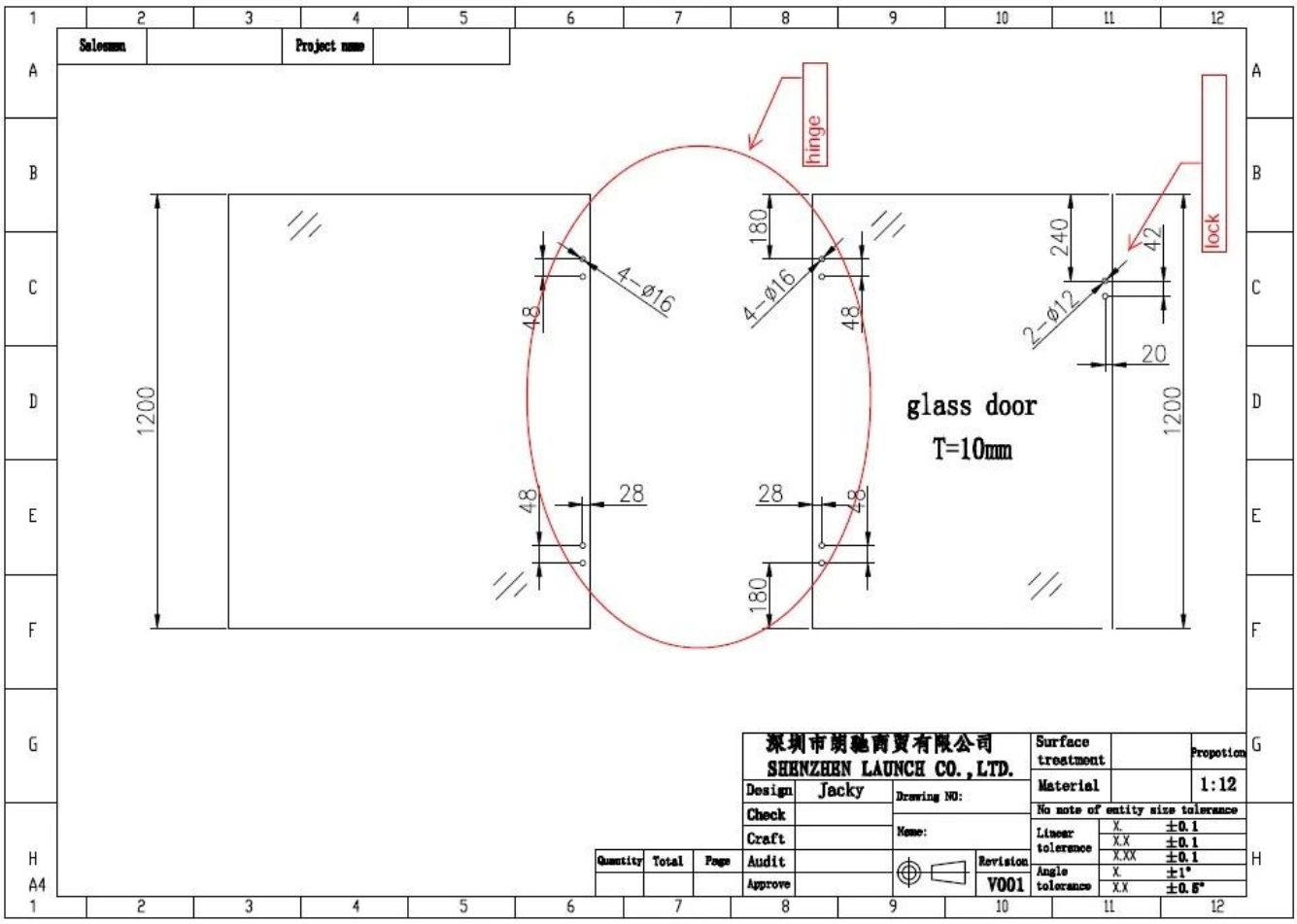

Other models of glass hinges -
glass to wall hinge

glass to round post hinge

Production photos of glass hinges-

Project photos of swimming pool fence-