High-rise building 304 Stainless steel big size 100*80mm slot balustrade post for terrace railings .

- Custom big size balustrade post 100*80*2mm ; 1 way & 2 way posts with plastic inserts f or 12mm thick glass
- Custom design oval shape top handrails 100*150mm

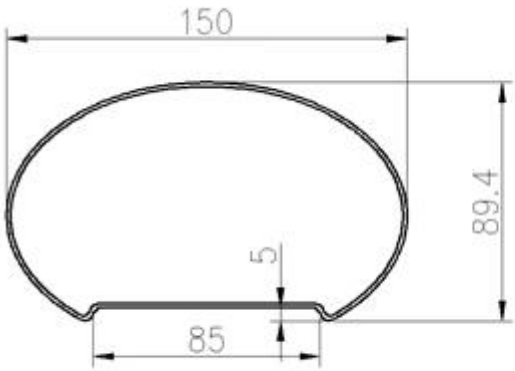

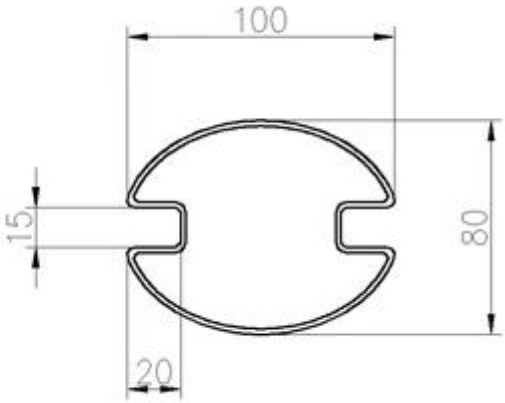

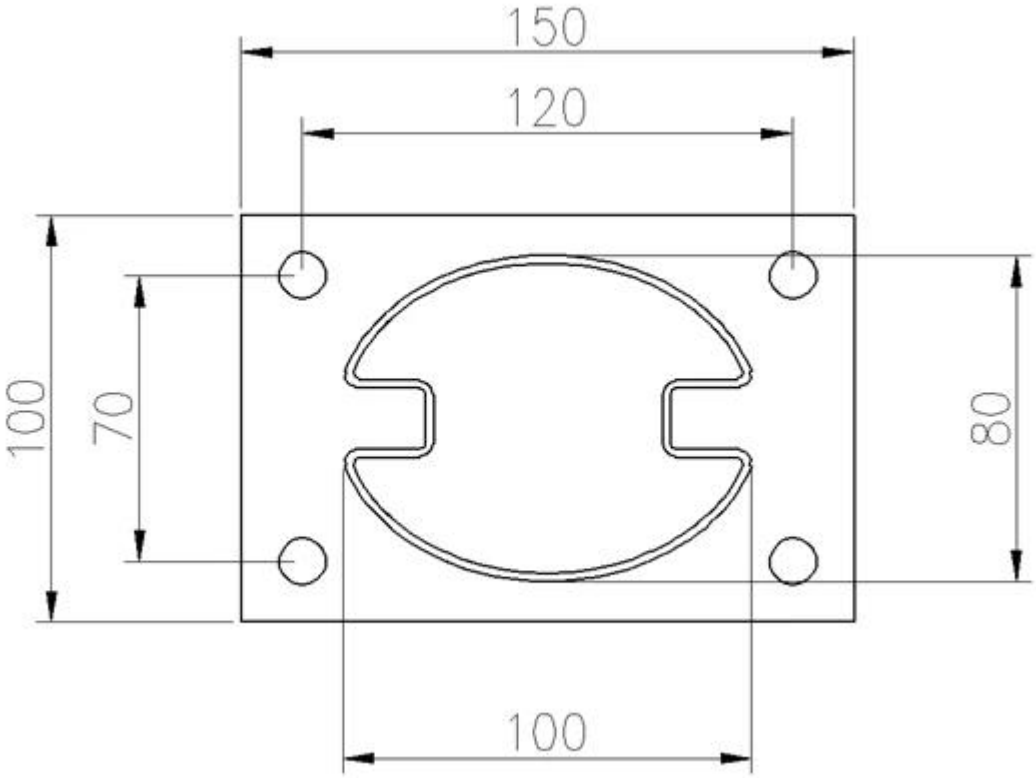

Please contact us for more details and pricings .

Customer's job site -

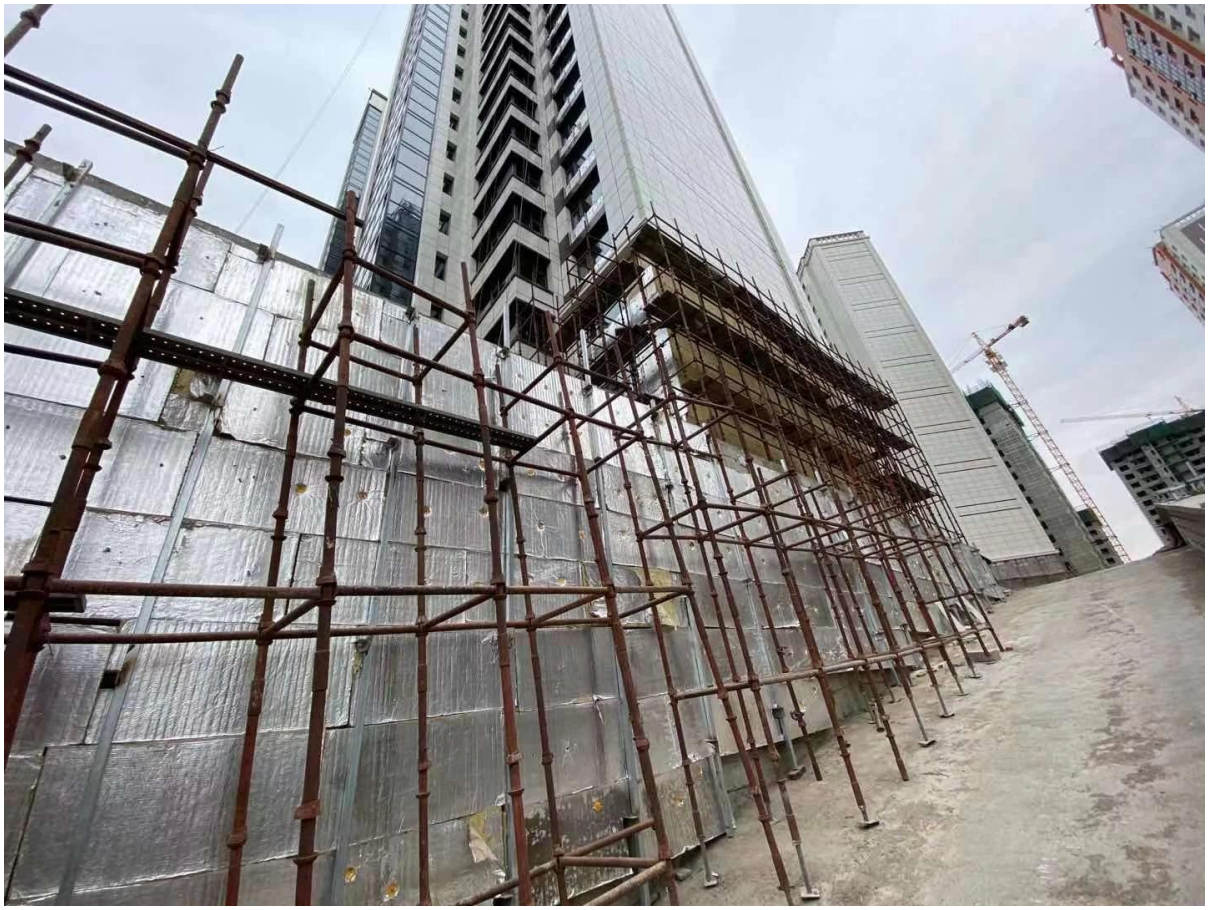

Production of slot balustrade handrails & glass panels-

connectors for balustrade handrails-

slot handrails -

clear tempered glass-