Braçadeira de aço inoxidável do impasse, balcão de Juliet e sistema de vidro aparafusado

Nome do Produto	Braçadeira de aço inoxidável do impasse, balcão de Juliet e sistema de vidro aparafusado
Modelo não.	SF-50T
Material	Aço Inoxidável 304/316
Terminar	Espelho polido ou acetinado
Tamanho impasse de vidro	Tampa de 50x12mm, corpo 50x44mm, base 200 * 100 * 10
Para espessura de vidro	12-19mm, ou como por exigências de clientes
Furo de vidro perfurado	Diâmetro 14mm exigido em vidro
Peso líquido	3236 g / peça
Montagem	substrato de madeira, aço ou concreto
MOQ	Uma pedaço
Amostra	acessível
OEM & Serviço de ODM	Aceitável
Aplicação	Escadas interiores e exteriores design, corrimão varanda, trilhos de vidro sem moldura de convés, design varanda Juliet, escadaria flutuante
Inspeção de fábrica	acessível
Embalagem standoff	Um pedaço em um saco plástico de bolhas, em seguida, em uma caixa branca, 12 peças em uma caixa de papelão ou embalagem de acordo com as exigências dos clientes

Mostra do produto:

KEBIL科比奥®

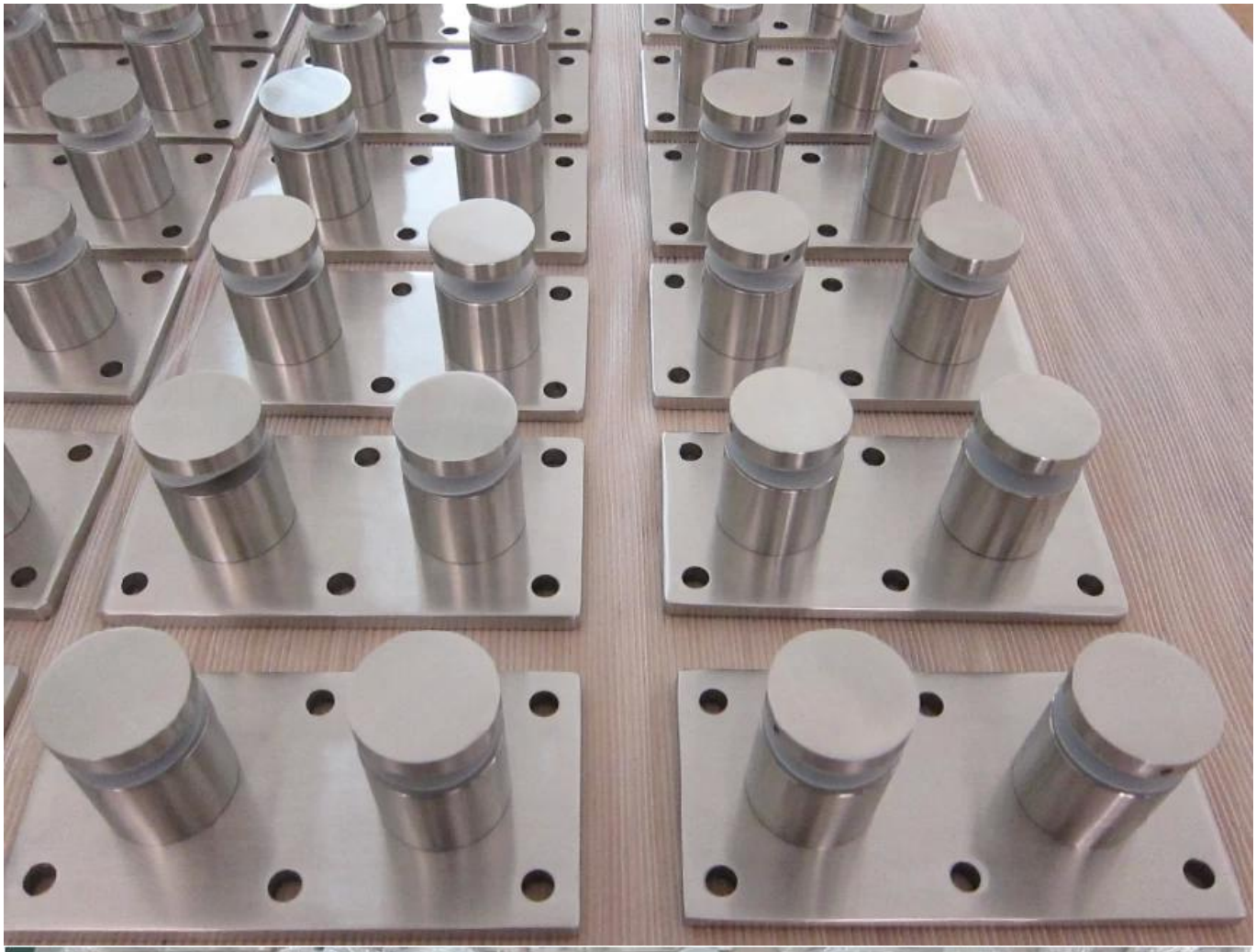

Desenho técnico:

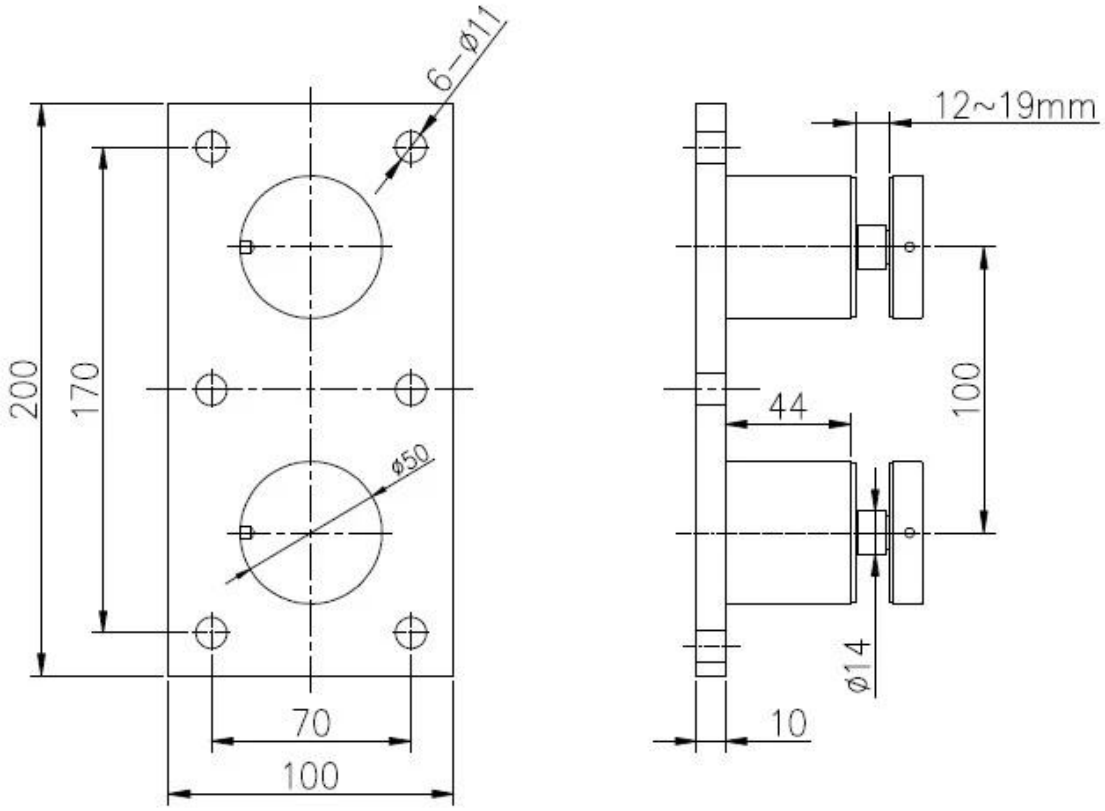

Fotos do Projeto:

OUTROS TIPOS SUPORTES DE VIDRO DE VIDRO DISPONÍVEIS:
Diâmetro 50mm Standoff de vidro em **Espelho / Modelo de acabamento acetinado SF-50**:

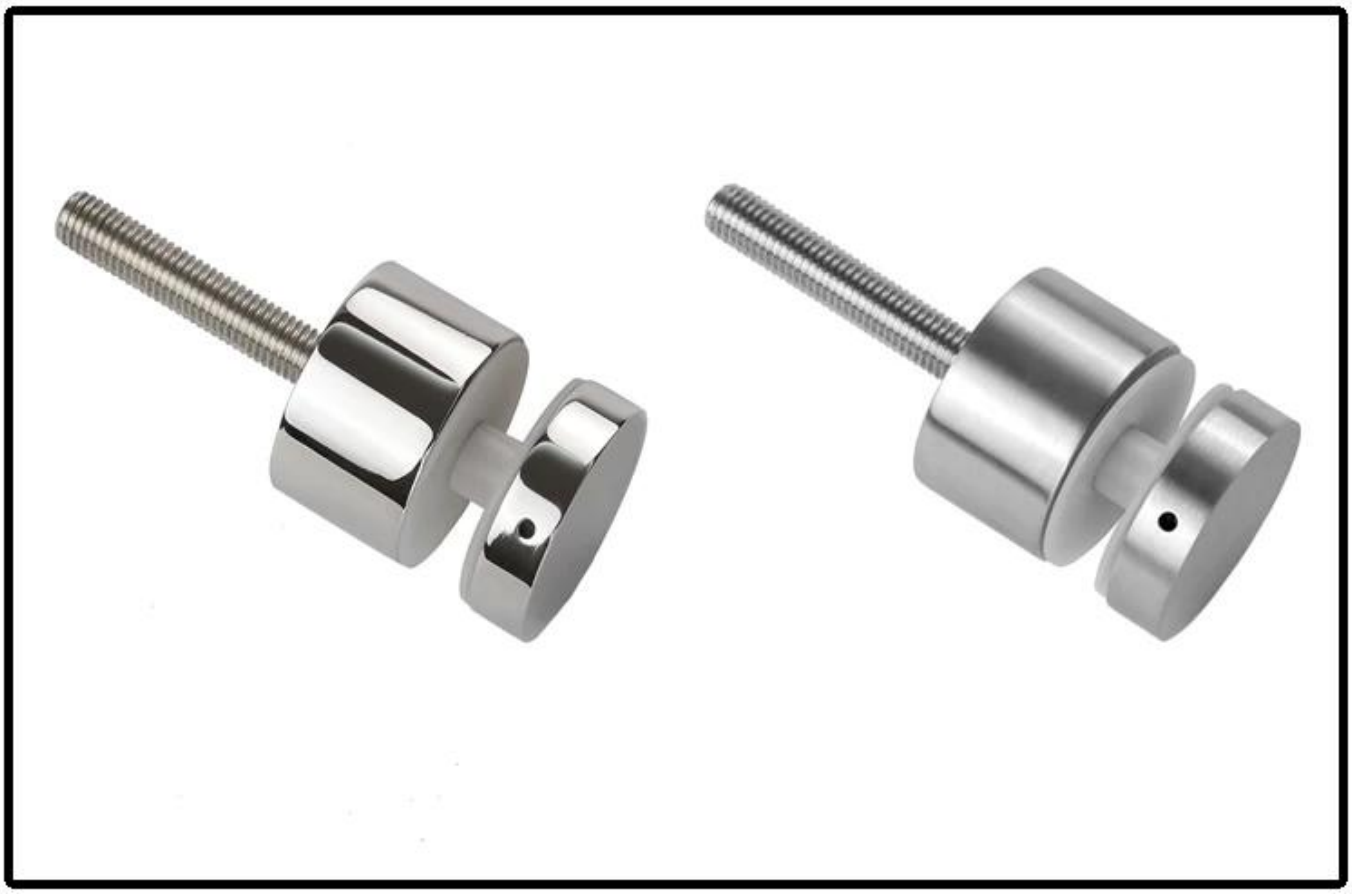

Com parafuso de betão & parafuso de madeira Modelo SF-50W:

Desenho técnico:

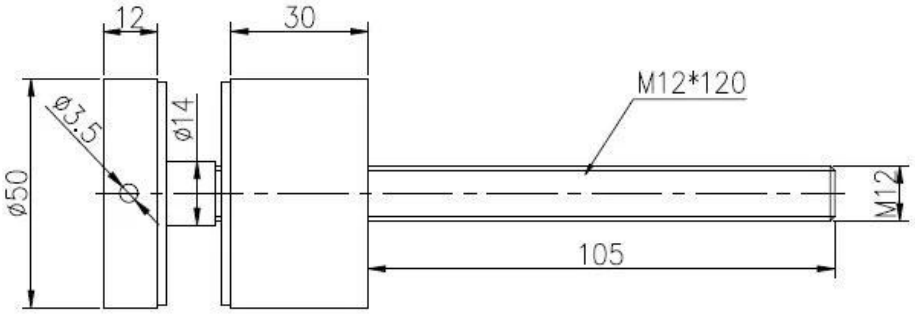

Salesman		Project name	

深圳市朝驰商贸有限公司 SHENZHEN LAUNCH CO.,LTD.			
Design	Jacky	Drawing NO:	
Check			
Craft		Name:Standoff	
Audit			Revision
Approve			V001

Quantity	Total	Page

Surface treatment		Propotion
Material	SS 316	1:1
No note of outity size tolerance		
Linear tolerance	X.	±0.1
	X.X	±0.1
	X.XX	±0.1
Angle tolerance	X.	±1°
	X.X	±0.5°

A4

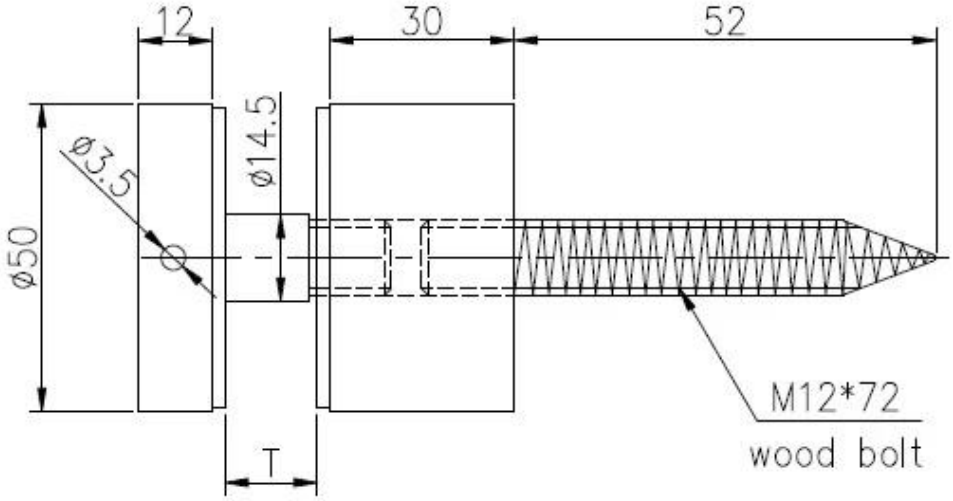

			深圳市朗驰商贸有限公司 SHENZHEN LAUNCH CO.,LTD.				Surface treatment		Propot
			Design	Jacky	Drawing NO:SF-50		Material		1:1
			Check				No note of entity size tolerance		
			Craft		Name:Standoff		Linear tolerance	X.	±0.1
Quantity	Total	Page	Audit			Revision		X.X	±0.1
								X.XX	±0.1
			Approve			V001	Angle tolerance	X.	±1°
								X.X	±0.5°

Fotos do Projeto:

O impasse de vidro exterior e interno, projeto de trilhos de vidro do afastamento frameless, suporte de aço inoxidável do impasse de vidro, pino do impasse de vidro

Impasse de vidro de aço inoxidável para balaustrada de vidro sem moldura

impasse de aço inoxidável, suporte para painéis de vidro, design de trilhos

Informação da companhia:

Shenzhen Launch Co., Ltd was established in 2004, located at Nanshan District, Shenzhen, and one hour by car from Hongkong International Airport. Our main product is high-grade building materials includes stainless steel balustrade post, staircase handrail, balcony guardrail, swimming pool fence and other high-grade building materials. All the products are designed strictly according to the high-end market requirements. We have our own factory in Tangxia Town, Dongguan, has a variety of precision equipment more than 50 sets: CNC lathe, milling machine, punching machine, pipe cutter, argon welder, drilling machine, polisher, etc. which can provide customers with complete product processing services. With the German SPECTRO Spectrometer, we insist on testing every batch of materials to ensure that the material is highly qualified. We also have hardness gauge, secondary element and other test equipment to ensure the products meets customers' requirements.

ABOUT US

OUR ADVANTAGE

Please do not hesitate to contact us if you have any requirement regarding our production lines, you can expect a timely reply with professional solutions!

Own factory, shortest lead time.

Can help customers design product drawings based on customer ideas and design engineering installation drawing according to the customer site sketch.

Sample order, trial order acceptable.

Provide material test report to ensure that the material is qualified.

13 years of industry experience, we can help customers recommend the best solution to help customers save cost.

OUR FACTORY

More than 13 years experience in hardware industry design and processing, we can provide customized services from design to the sample and small batch trial production.

OUR CERTIFICATE

With premium quality, competitive price and superior service, we won a lot of customers' favor.
Our products are popular in North America, European and Australia.

PRODUCTION PROCESS

Casting

CNC lathe

CNC Milling

Stamping

Drilling & Tapping

Polishing

PAYMENT & TRANSPORTATION

Welcome Alibaba Trade Assurance Order!

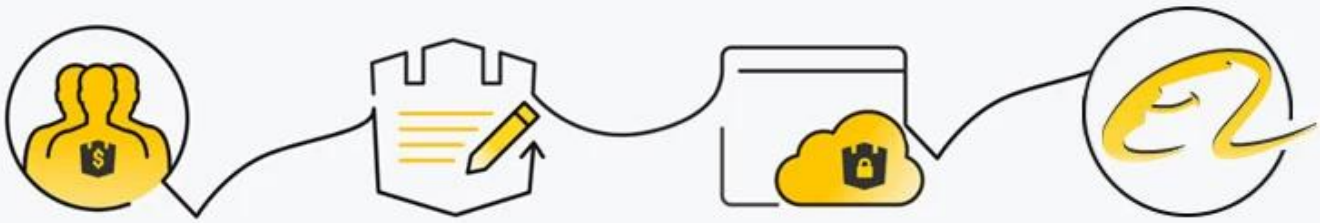

1. Start an order
2. Negotiate terms with our sales service & confirm order
3. Make payment
4. Alibaba provide full assurance

PayPal MasterCard VISA HSBC

FAQ

1. What materials do you have?

SS304, SS316, SS316L, Duplex 2205, etc.

2. Can you send me your whole price list?

Sorry, as the price related to many factors, such as quantity, material type, surface treatment and so on, we will offer you exact quote after we confirm your detailed requirements.

3. Do you offer OEM & ODM service?

Yes, we can make the products according to your technical drawings or samples, we are professional in investment casting, die casting, stamping, CNC machining, etc.

4. What kind of payment you accept?

T/T, L/C, PayPal, West Union, etc.

5. What is your payment term?

TT(30/70) or LC at sight.

6. What is your delivery time?

Within 5 workdays for hot-sale items, 15-25 workdays for batch orders.

7. Do you offer after-sales service?

Of course, any question after you purchase our products, we will get back to you within 24 hours.

Contacte-nos agora para mais informações!
Email: sales03@launch-china.cn
Mob: +8615907334556

KEBIL科比奥® SHENZHEN LAUNCH CO.LTD
LAUNCH INTERNATIONAL LIMITED

Eve Chow

Sales representative

M : +86 159 0733 4556

T : +86 755 8603 7559

E : sales03@launch-china.cn

A : B5-5003, Yilida Bldg, Nanshan District, Shenzhen