Os trilhos da escadaria projetam o suporte isolador de vidro ajustável da montagem da parede de aço inoxidável

Especificações:

Nome do Produto	Supressor de vidro, Corrimão de vidro isolado, Suporte de vidro regulável
Material	Aço Inoxidável 304/316
Outro nome	pino do impasse de vidro, parafusos de standpff
Terminar	Espelho polido ou acetinado
Tamanho impasse de vidro	1 1/2 "x 1 1/2", M12 * 120mm parafuso de madeira, junta de borracha de silicone incluído
Para espessura de vidro	12-19mm, ou como por exigências de clientes
Furo de vidro perfurado	Diâmetro 14mm exigido em vidro
Peso líquido	495g / peça
Montagem	montagem em parede / montagem lateral / montagem em painel
MOQ	10 peças
Amostra	acessível
OEM & Serviço de ODM	Aceitável
Aplicação	Escadas interiores e exteriores design, corrimão varanda, trilhos de vidro sem moldura de convés, design varanda Juliet, escadaria flutuante
Inspeção de fábrica	acessível

Diâmetro 50mm Standoff de vidro / botão em **Acabamento Espelhado**:

Com parafuso de madeira para montagem em substrato de madeira:

Desenho técnico:

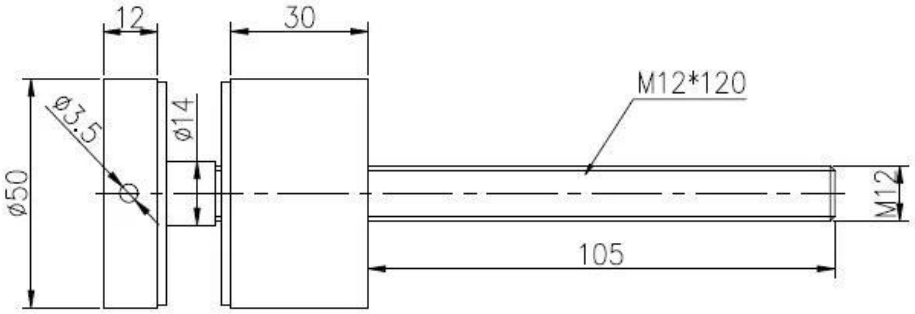

Salesman		Project name	

深圳市朝驰商贸有限公司 SHENZHEN LAUNCH CO.,LTD.			
Design	Jacky	Drawing NO:	
Check			
Craft		Name:Standoff	
Audit			Revision
Approve			V001

Quantity	Total	Page

Surface treatment		Propotion
Material	SS 316	1:1
No note of outity size tolerance		
Linear tolerance	X.	±0.1
	X.X	±0.1
	X.XX	±0.1
Angle tolerance	X.	±1°
	X.X	±0.5°

A4

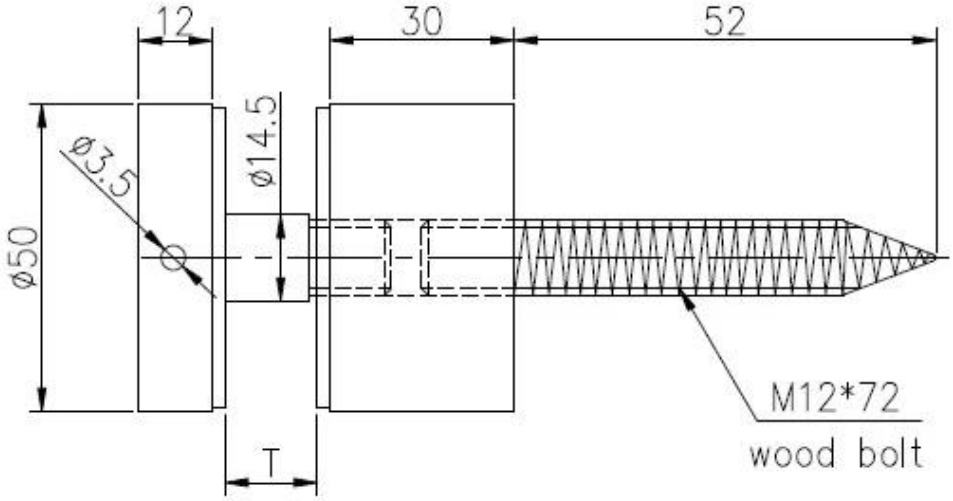

			深圳市朗驰商贸有限公司 SHENZHEN LAUNCH CO.,LTD.				Surface treatment		Propot
			Design	Jacky	Drawing NO:SF-50		Material		1:1
			Check				No note of entity size tolerance		
			Craft		Name:Standoff		Linear tolerance	X.	±0.1
Quantity	Total	Page	Audit			Revision		X.X	±0.1
								X.XX	±0.1
			Approve			V001	Angle tolerance	X.	±1°
								X.X	±0.5°

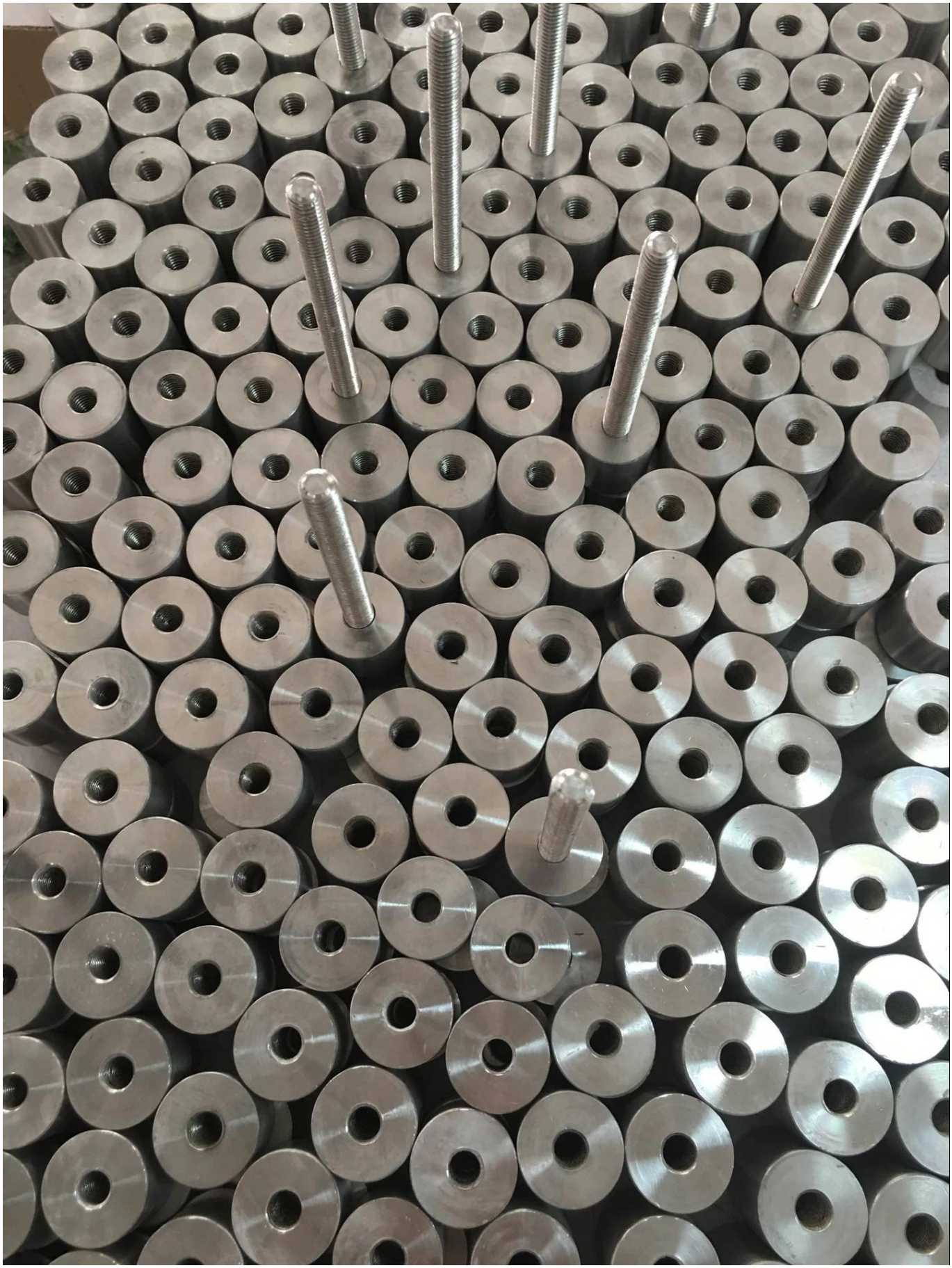

Fotos do Projeto:

Balaustrada de aço inoxidável do sistema de vidro da balaustrada do botão

Impasse de vidro de aço inoxidável para balaustrada de vidro sem moldura

impasse de aço inoxidável, suporte para design de trilhos da escada

Informação da companhia:

Shenzhen Launch Co., Ltd was established in 2004, located at Nanshan District, Shenzhen, and one hour by car from Hongkong International Airport. Our main product is high-grade building materials includes stainless steel balustrade post, staircase handrail, balcony guardrail, swimming pool fence and other high-grade building materials. All the products are designed strictly according to the high-end market requirements. We have our own factory in Tangxia Town, Dongguan, has a variety of precision equipment more than 50 sets: CNC lathe, milling machine, punching machine, pipe cutter, argon welder, drilling machine, polisher, etc. which can provide customers with complete product processing services. With the German SPECTRO Spectrometer, we insist on testing every batch of materials to ensure that the material is highly qualified. We also have hardness gauge, secondary element and other test equipment to ensure the products meets customers' requirements.

ABOUT US

OUR ADVANTAGE

Please do not hesitate to contact us if you have any requirement regarding our production lines, you can expect a timely reply with professional solutions!

Own factory, shortest lead time.

Can help customers design product drawings based on customer ideas and design engineering installation drawing according to the customer site sketch.

Sample order, trial order acceptable.

Provide material test report to ensure that the material is qualified.

13 years of industry experience, we can help customers recommend the best solution to help customers save cost.

OUR FACTORY

More than 13 years experience in hardware industry design and processing, we can provide customized services from design to the sample and small batch trial production.

OUR CERTIFICATE

With premium quality, competitive price and superior service, we won a lot of customers' favor.
Our products are popular in North America, European and Australia.

PRODUCTION PROCESS

Casting

CNC lathe

CNC Milling

Stamping

Drilling & Tapping

Polishing

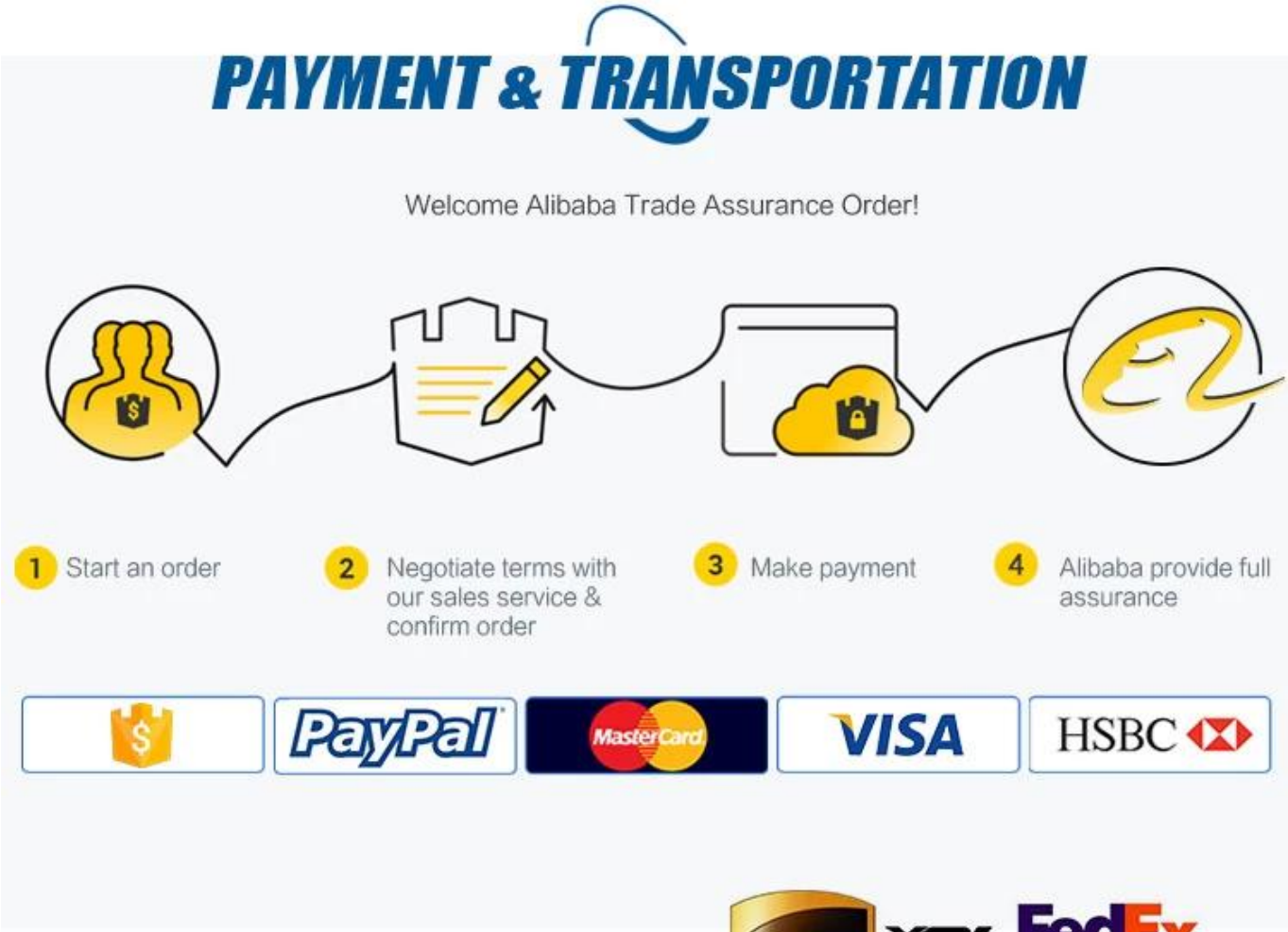

Contacte-nos agora para mais informações!
Email: sales03@launch-china.cn

Mob: +8615907334556