Corrimão de vidro sem moldura para varanda
50mm diâmetro vidro impasse parafusos parede montar , ininterrupto vistas!

O corrimão de vidro é composto por parafusos de vidro de aço inoxidável, painéis de vidro temperado (vidro temperado claro com 10-19 mm de espessura ou vidro temperado ultra claro), corrimãos superiores opcionais.

Recursos dos parafusos espaçadores de vidro -

- Modelo no. SF-50
- Material: aço inoxidável 304/316
- escovado ou polido
- Tampa de 50 * 12mm, corpo de 50 * 30mm, parafuso M12 * 120
- feito por usinagem cnc
- parafusos de apoio sólidos
- peso 715g
- outros diâmetros de parafusos espaçadores também estão disponíveis 30 mm, 38 mm, 40 mm etc.

fotos de parafusos de vidro para grades de vidro sem moldura da varanda -

KEBIL科比奥®

KEBIL科比奥®

KEBIL科比奥®

KEBIL科比奥®

# SF-50

desenho de parafusos de vidro sem moldura

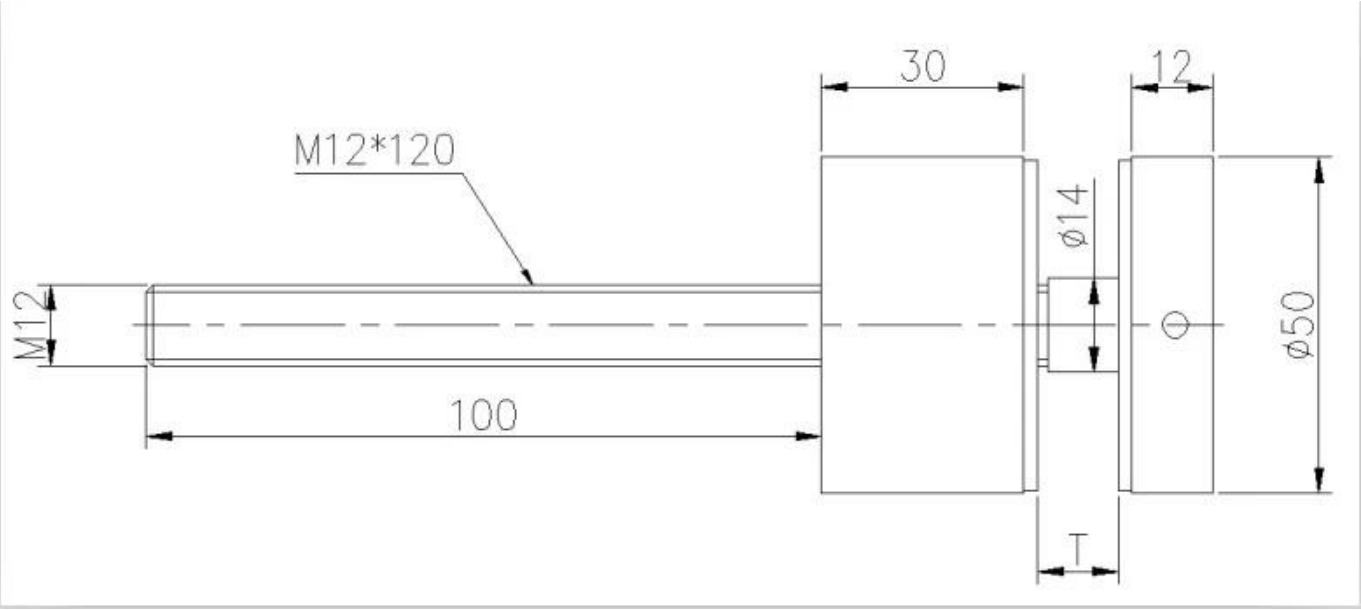


Fotos da embalagem do impasse de vidro sem moldura -

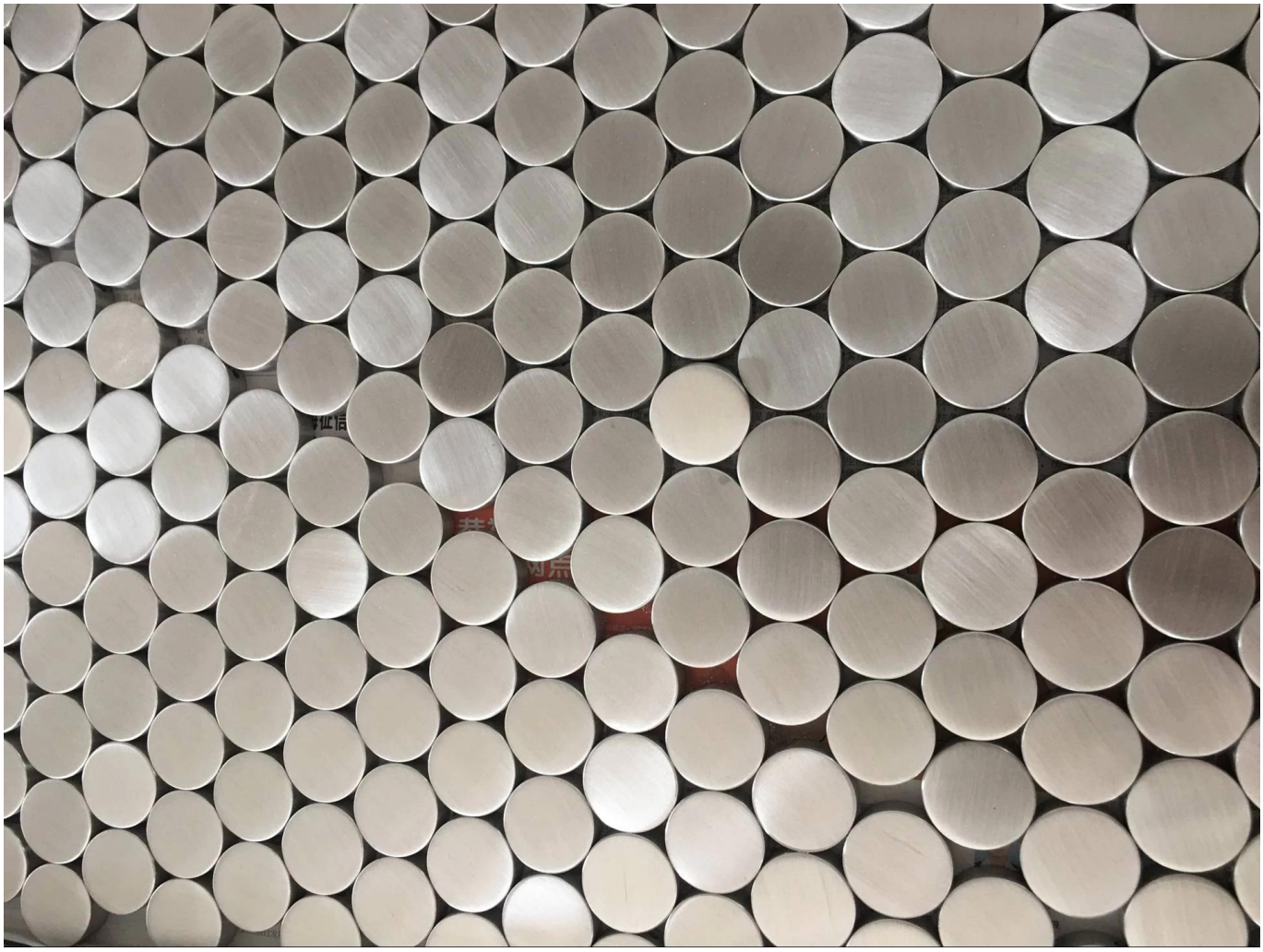

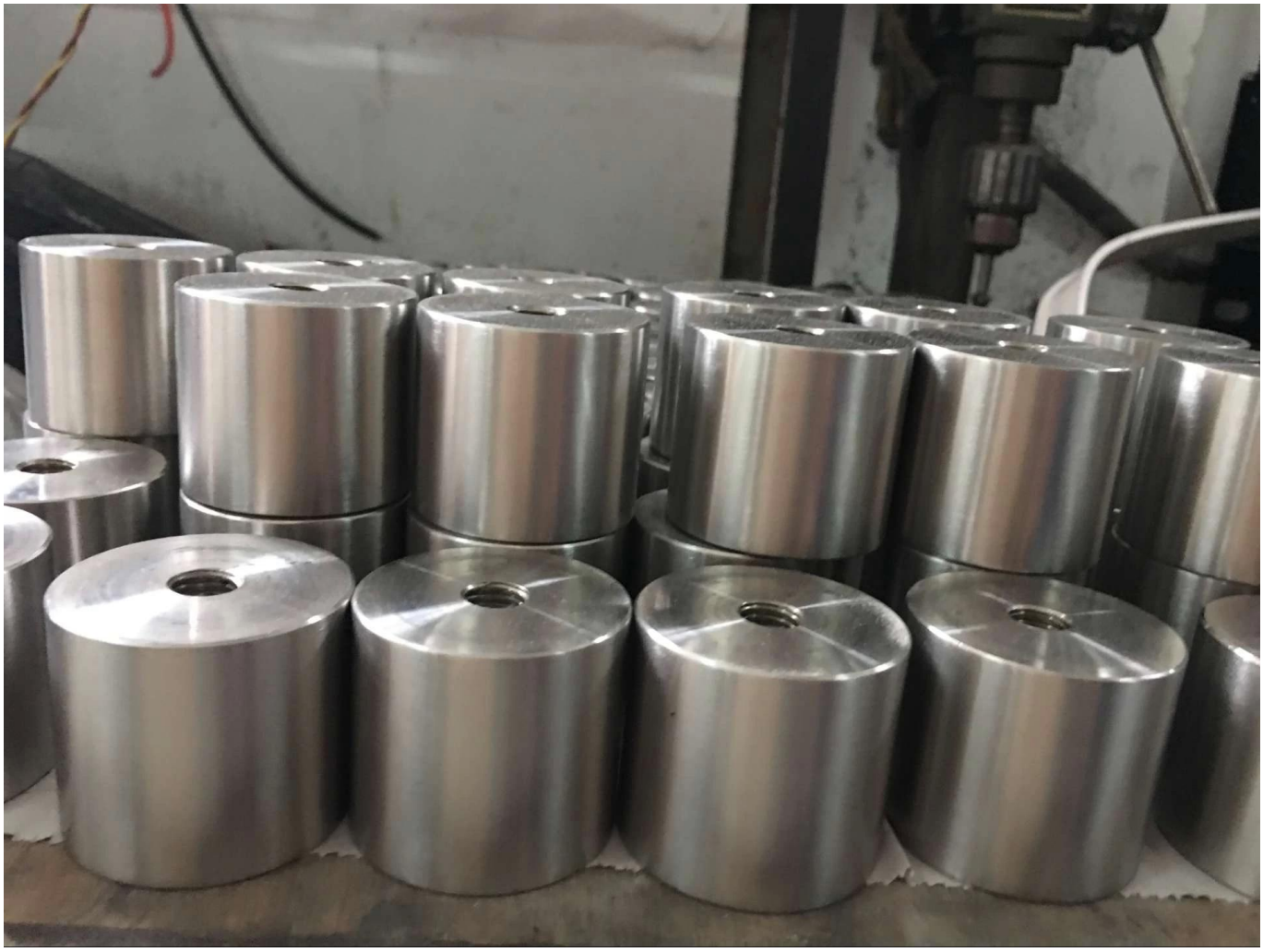

Projete fotos de trilhos de vidro sem moldura com nossos parafusos de vidro-

Mais sobre SHENZHEN LAUNCH CO. LTD-

# Company profile

Shenzhen Launch Co., Ltd was founded in the year 2004, with full experience in below production lines:

1. Construction materials including stainless steel railing materials ,
handrail fittings ,clamps, brackets, flanges , stainless steel tubing /sheet etc.

2. Professional OEM services such as laser cutting, precision casting
(Stainless steel and Titanium), metal punch, cold rolling precision tube
( tolerance for inner and outer diameter can be controlled within plus/minus0.01mm), CNC machining, Al, Zinc alloy
die casting, hardware welding, tube bending, water heater accessories, solar energy equipment accessories, auto parts, etc.

We have been supplying middle and high end construction materials / OEM fabrication parts to our main market in Europe , North America , Oceania , for more than 15 years . Recent years we have also been supplying our materials to Middle East , South America .

## Laser cutting workshop

## CNC machine workshop

Sheet metal & bending machine workshop

# Stamping shop

160T 宽台面冲床 模具加工尺寸800*1800mm

# Die making shop

Sample Show room

Project reference-
Hot dip galvanizing parts for USA

Welding handrails for Australia

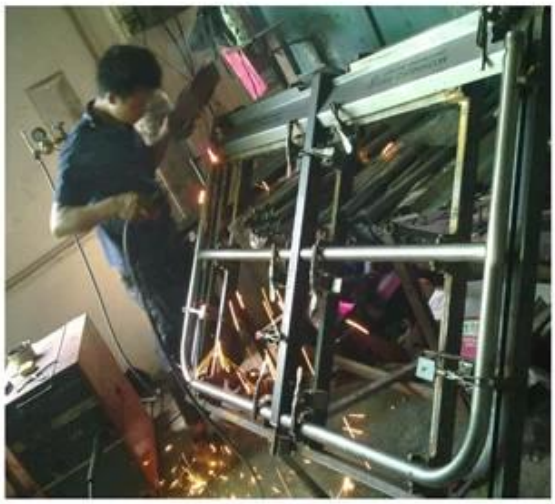

SS Front panel project for building in Australia

SS sheet panels

Steel tubing for USA

# SS HANDRAIL FOR CANADA

**Office address:** B5-003, 5/F-Block 3, Yilida Building, No. 1092 Nanshan Road, Nanshan District,Shenzhen , China , postal code 518054

Tel: 86-755-86037559 Fax:86-755-86372611

**Factory address in Dongguan :** 1st floor , Building A , Ruixin Hengye No.3 industrial area, Taixing Road, Shigu Town,Tangxia district , Dongguan

**Contacts:**

Gao Binfeng –Managing director E. admin@launch-china.cn PH. 86-755-86037559

Celia Chen – Sales manager E. sales01@launch-china.cn PH. 86-755-86037559 MOB .+8613590273543

Jacky Pei – Chief Engineer PH . 86-755-86037559