Компания Shenzhen Launch Co., Ltd специализируется на разработке и производстве высококачественных металлических строительных материалов, компонентов для обработки и штамповки листового металла с 2004 года. Мы являемся надежным производителем и поставщиком для клиентов по всему миру.

WHY CHOOSE US

15 YEARS EXPERIENCE

We have been manufacturing railing hardwares since 2004.

ONE STOP SERVICE

We provide integrated railing solutions.
We manufacture.
We deliver.

PROFESSIONAL R&D TEAM

We have engineering experts for developing new products.

TOP QUALITY & GOOD PRICE

We are strict on quality control as well as cost evaluation.

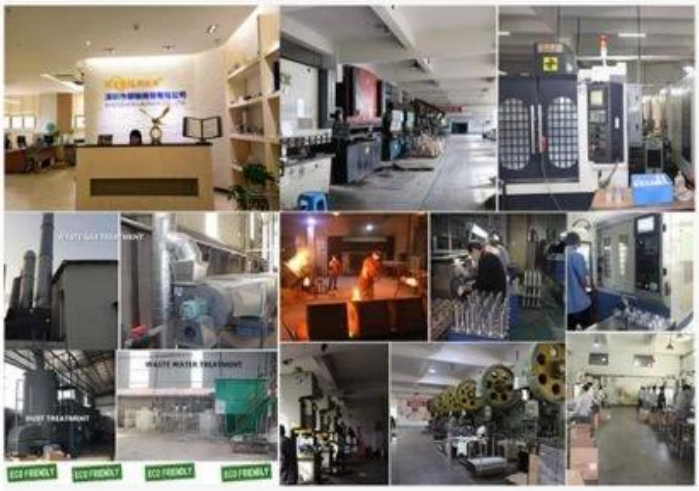

ABOUT US

Shenzhen Launch Co., Ltd was established in 2004, located at Nanshan District, Shenzhen, and one hour by car from Hongkong International Airport. Our main products are high-grade building materials including stainless steel balustrade post, staircase handrail, balcony guardrail, swimming pool fence and other high-grade building materials. All the products are designed strictly according to the high-end market requirements. We have our own factory in Tangxia Town, Dongguan,with more than 50 sets of various precision equipments , such as CNC lathe, milling machine, punching machine, pipe cutter, argon welder, drilling machine, polisher, etc. which can provide customers with complete product processing services.

COMPANY INTRODUCTION

Verification Type: Supplier Assessment Onsite Check

Country / Region: Guangdong, China ✓

Year Established: 2004 ✓

Main Products: CNC Machining Parts,Stamping Pa... ✓

Main Markets: North America, Oceania, Mid East,... ✓

Total Annual Revenue: confidential ✓

Total Employees: 11 - 50 People ✓

Alibaba.com Gold Plus Supplier

Main Product Lines Verification Report

Presented to

Shenzhen Launch Co., Ltd.

深圳市朗驰商贸有限公司

Company Address	B5003, Building 3, Yilida Building, No. 1092 Nanshan Avenue, Dengliang Community, Nanshan Street, Nanshan District, Shenzhen City, Guangdong Province, China
Consigner of Assessment:	Alibaba
Gold Supplier Member ID:	launch168
Gold Supplier Company Name:	Shenzhen Launch Co., Ltd.
Contact Person:	Mr. Binfeng Gao
Phone Number:	0086-13802569770
Fax Number:	0086-755-86372611
Email:	gbf999@china.com
Website Address (URL):	http://launch-china.en.alibaba.com

Service Provided by SGS
Report No.: 19536352_P+T

Alibaba.com Global trade starts here. SGS

Alibaba.com Gold Plus Supplier

Verified

Assessment Report

Presented to

Cooperation Company of Shenzhen Launch Co., Ltd.

深圳市朗驰商贸有限公司合作工厂

Gold Supplier & Assessed Company Relationship:	☐ Self-owned ☐ Wholly Owned ☐ Shareholder/Partner ☐ Kindred between Owners ☒ Cooperation Partner
Company Address:	Confidential
City / Country:	Huizhou / China
Consigner of Assessment:	Alibaba & Shenzhen Launch Co., Ltd.
Gold Supplier Member ID:	launch168
Gold Supplier Company Name:	Shenzhen Launch Co., Ltd.
Contact Person:	Confidential
Phone Number:	Confidential
Fax Number:	Confidential
Email:	Confidential
Website Address (URL):	http://launch-china.en.alibaba.com

Service Provided by SGS
Report No.: 19552720_P

Alibaba.com Global trade starts here. SGS

Выставка продуктов

KEBIL科比奥®

Marine Duplex 2205 Spigot

Стеклянный патрубок других типов

Часть No.	Материал	Конец	Толщина стекла	Замечания
УОР	Дуплекс 2205 316SS 304SS	Атлас / Зеркало	10-13,52 мм	
СКМ	Дуплекс 2205 316SS 304SS	Атлас / Зеркало	10-13,52 мм	Дополнительная длина доступна сваркой
RCM	Дуплекс 2205 316SS 304SS	Атлас / Зеркало	10-13,52 мм	Дополнительная длина доступна сваркой

SFM	Дуплекс 2205 316SS 304SS	Атлас / Зеркало	10-13,52 мм	

Номер детали: RBM

Номер детали: SCM

Номер детали: RCM

Номер детали: SFM

KEBIL科比奥®

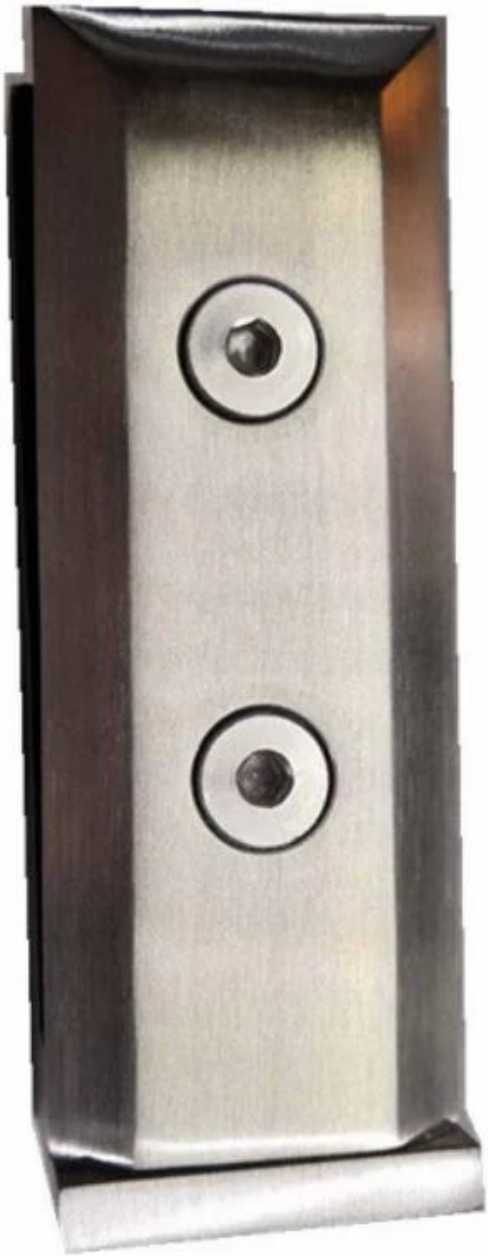

Технический чертеж

SBM и SCM

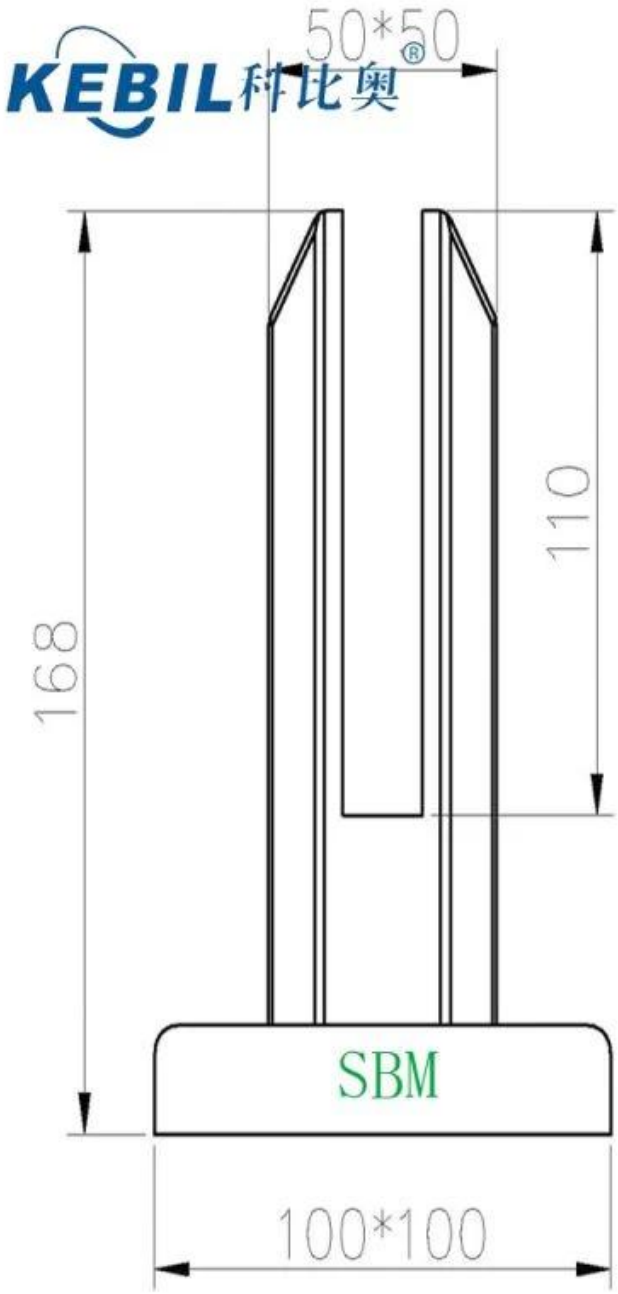

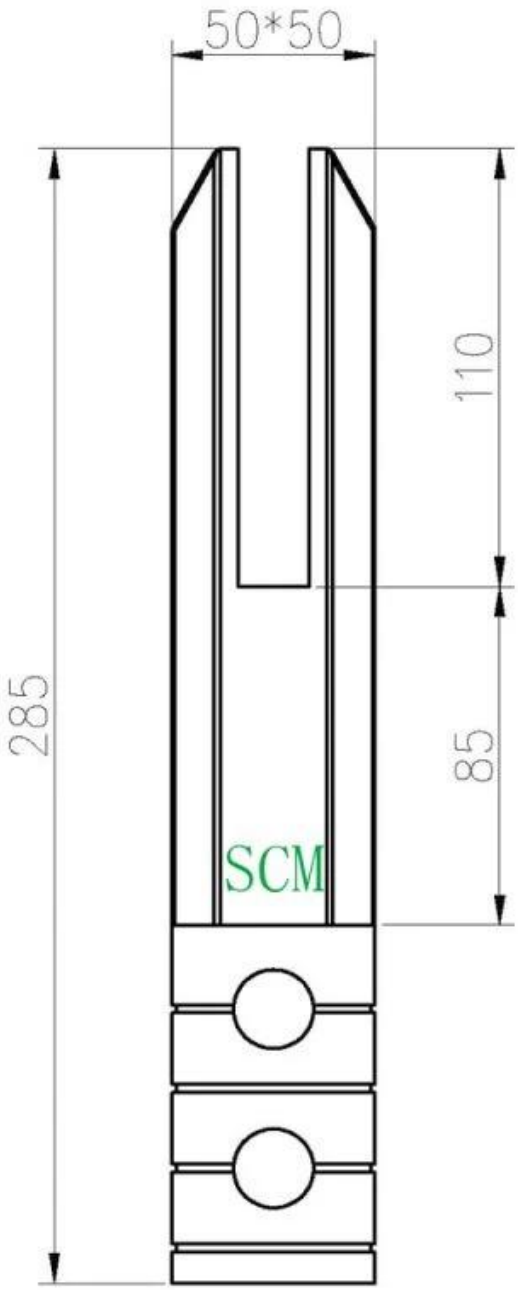

RBM и RCM

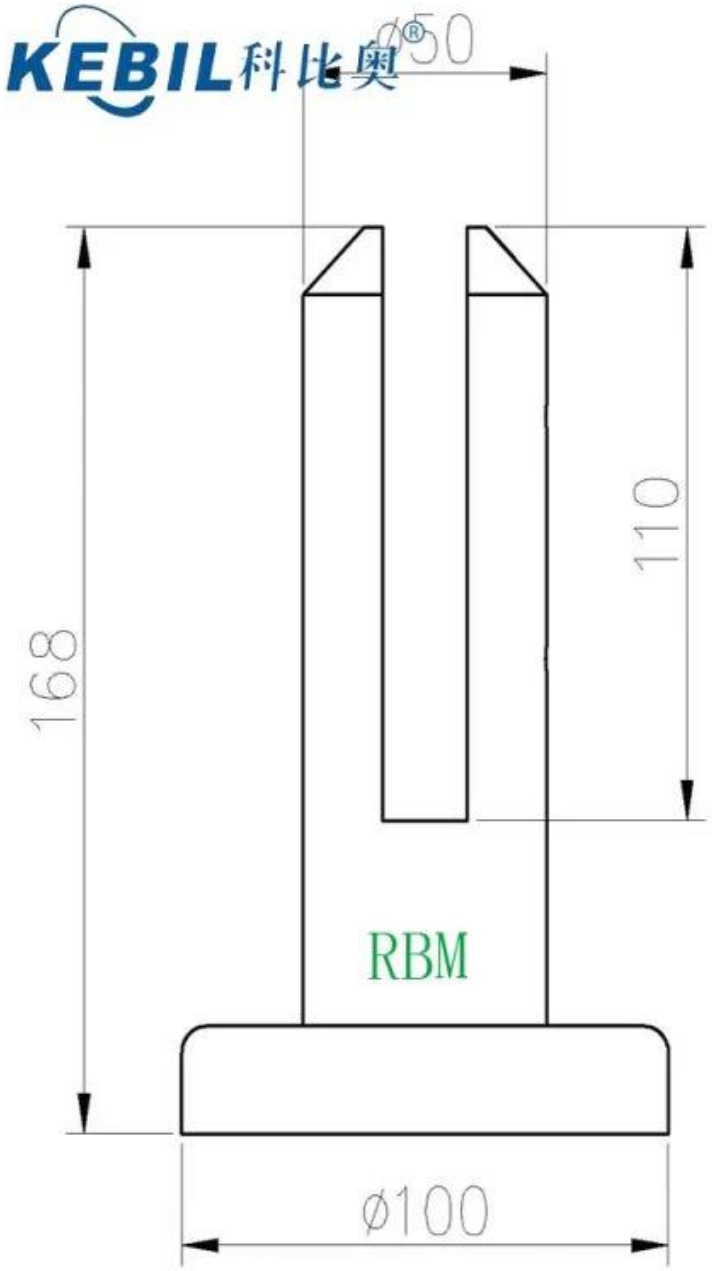

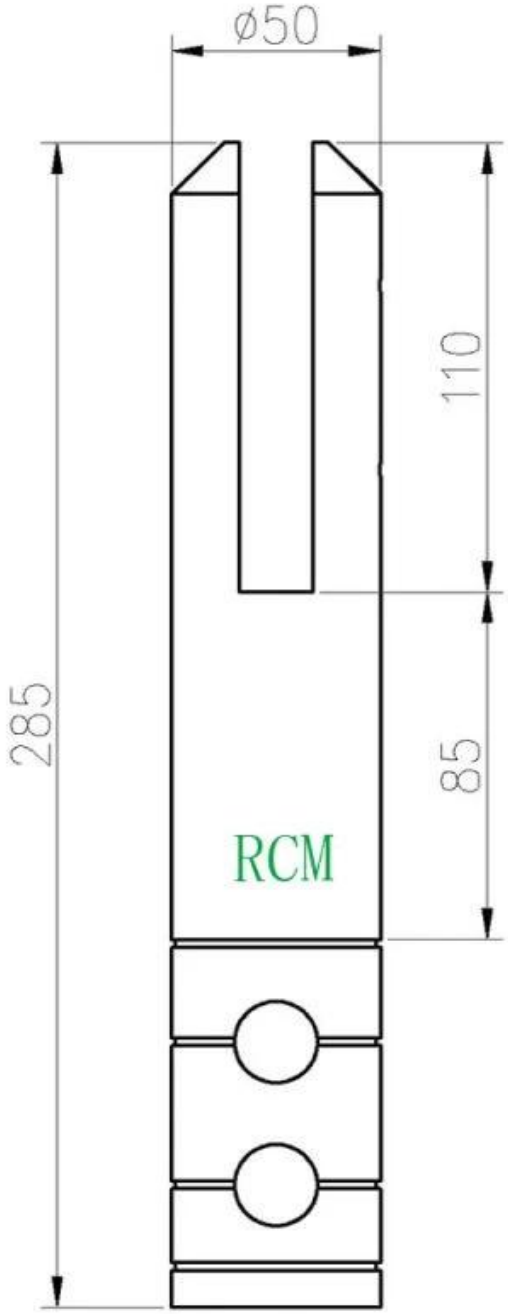

Боковой монтаж SFM

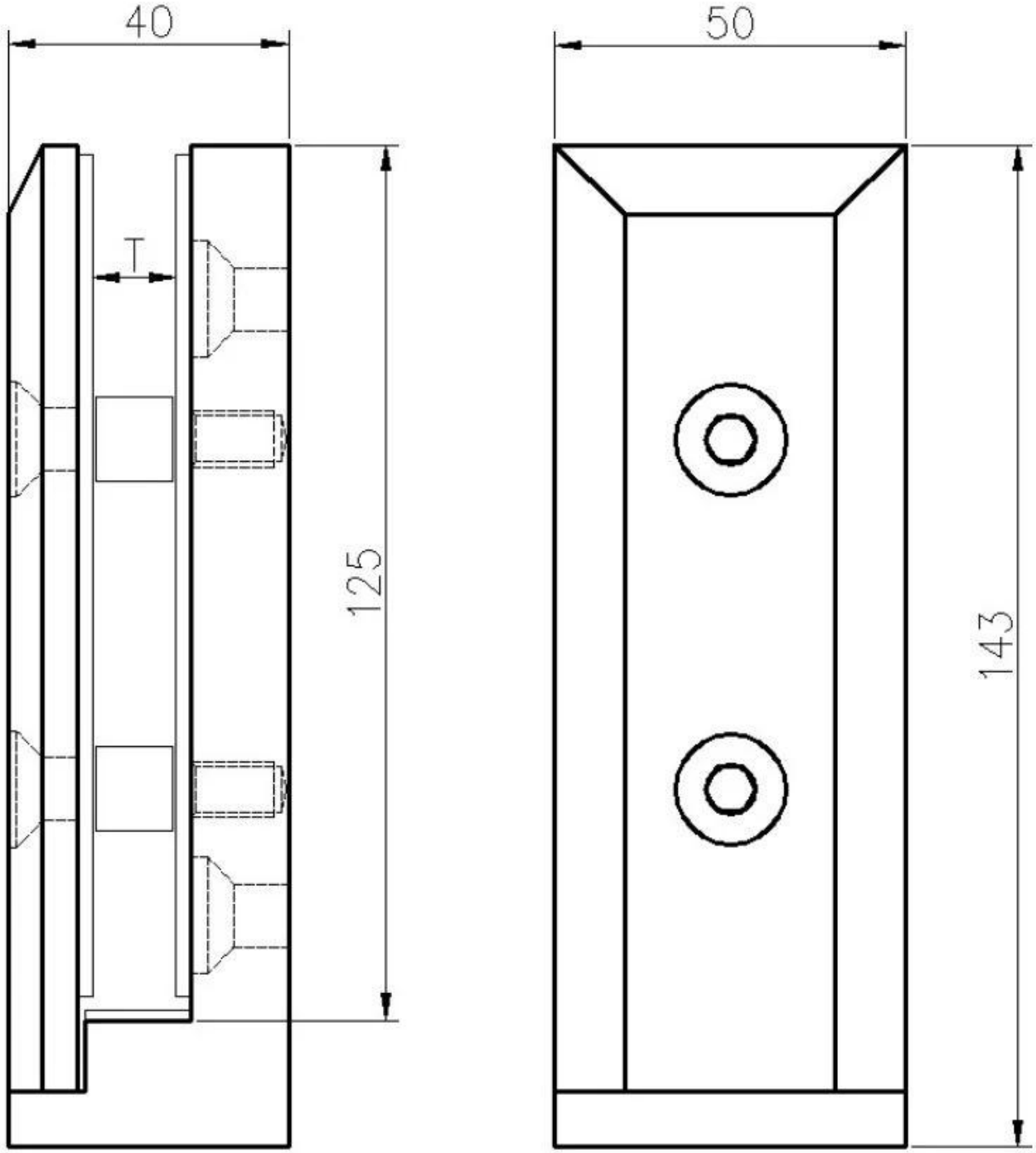

Чертежи приложений

KEBIL科比奥®

Пожалуйста, не стесняйтесь обращаться к нам, если у вас есть запрос.

Attn: Фрэнк Фанг
Телефон: +8615906261741
Электронная почта: sales02@launch-china.cn